THIS DRAWING IS UNPUBLISHED. RELEASED FOR PUBLICATION 20
© COPYRIGHT 20 BY - ALL RIGHTS RESERVED.

REVISIONS

| P | LTR | DESCRIPTION | DATE | DWN | APVD |
|---|---|---|---|---|---|
| | A | INITIAL | 25JUN2015 | DW | CW |
| | | | | | |
| | | | | | |
| | | | | | |

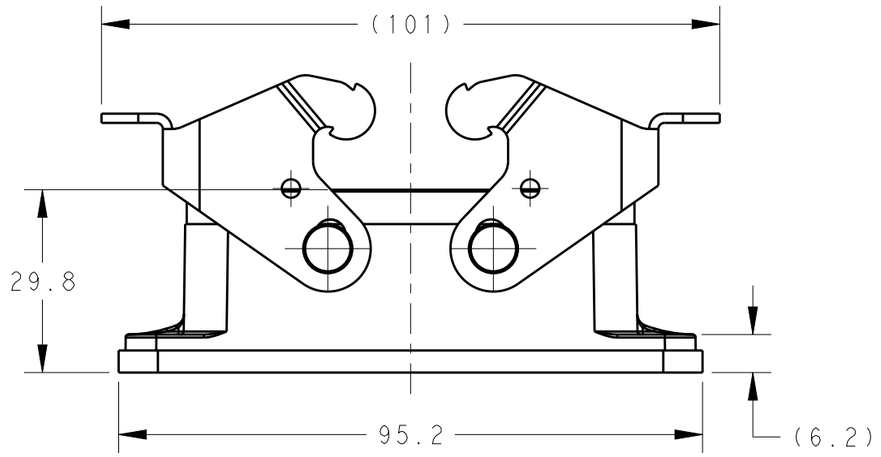


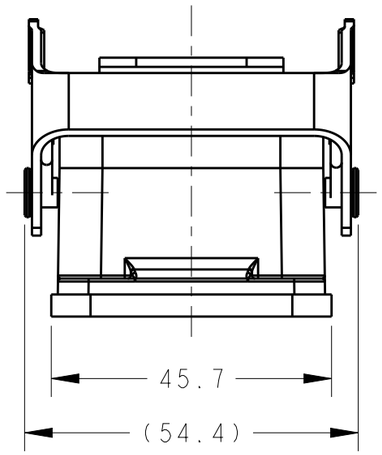


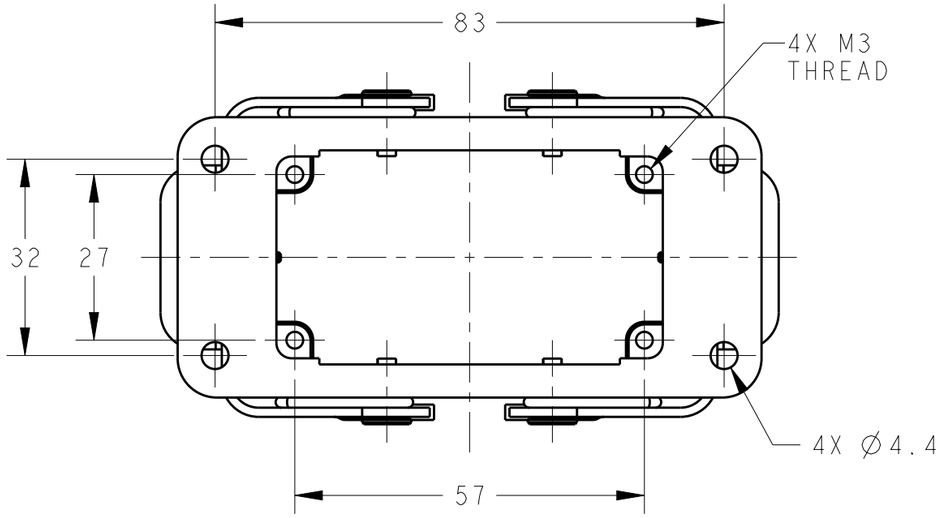


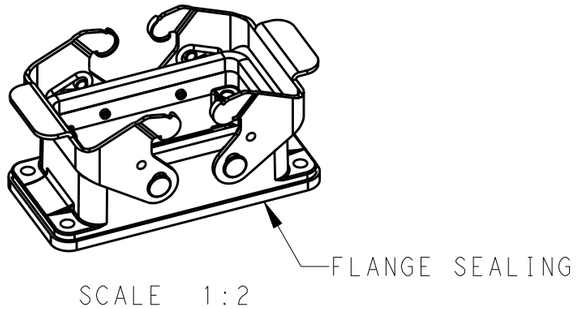


SCALE 1:2

NOTES:
1. TECHNICAL CHARACTERISTICS:
   HOUSING MATERIAL: DIE CAST ALUMINIUM ALLOY
   SURFACE: POWDER COATED, GREY
   OPERATION TEMPERATURE: -40-+125°C
   DEGREE OF PROTECTION: IP65 (MATED)

注释：
1. 技术参数：
   下壳材料： 铝合金
   表面处理： 粉末涂层，灰色
   工作温度： -40-+125°C
   防护等级： IP65(配合)

PANEL CUT OUT

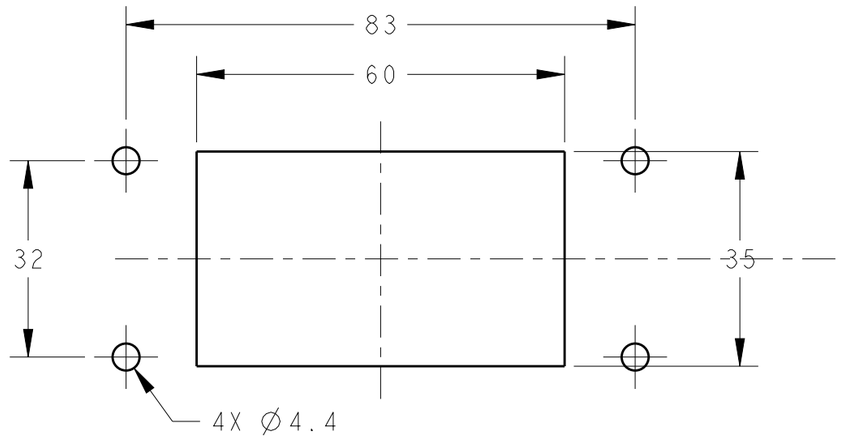


| PART NUMBER | DESCRIPTION | REMARK |
|---|---|---|
| T1410102000-000 | H10B-AG | GREY |
| T1410102000-100 | H10B-AG | GERY FLANGE SEALING FIXED BY GLUE WITH HOUSING |

THIS DRAWING IS A CONTROLLED DOCUMENT.

DIMENSIONS: mm

TOLERANCES UNLESS OTHERWISE SPECIFIED:
0 PLC ±-
1 PLC ±-
2 PLC ±-
3 PLC ±-
4 PLC ±-
ANGLES ±-

MATERIAL - -
FINISH - -

DWN David Wang 25JUN2015
CHK Chris Wang 25JUN2015
APVD Xiang Xu 25JUN2015
PRODUCT SPEC 108-137013
APPLICATION SPEC 114-137013
WEIGHT -

TE Connectivity

NAME H10B-AG

| SIZE | CAGE CODE | DRAWING NO | RESTRICTED TO |
|---|---|---|---|
| A3 | 00779 | C-T1410102000X00 | - |

Customer Drawing

SCALE 1:1 SHEET 1 OF 1 REV A