A Business Partner of Renesas Electronics Corporation.

California Eastern Laboratories

2015 - 2016

OPTOCOUPLERS + SOLID STATE RELAYS

Product Selection Guide

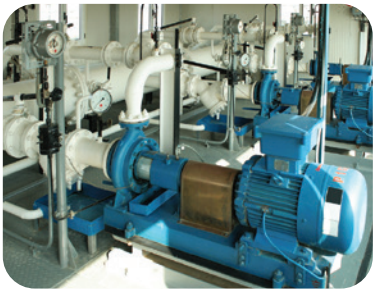

www.cel.com

RENESAS

California Eastern Laboratories (CEL) is the exclusive sales and marketing partner in the Americas for Compound Semiconductor Devices from Renesas Electronics Corporation, formerly NEC Electronics Corporation. These products include RF components and RFICs, optocouplers, solid state relays, and laser diodes and photo detectors.

Renesas Electronics optocouplers and solid state relays are used in a wide variety of markets including Consumer Electronics, Industrial, Power Supply, Test & Measurement, Datacomm, Lighting Control, Light Durable Goods and more. With over 50 years experience in customer support and fulfillment, CEL is ideally positioned to provide its customers with solutions tailored to meet their specific needs.

CEL maintains extensive inventories and provides engineering and applications assistance at its technical centers in Santa Clara, CA and Wauconda, IL. The company supports customers through sales offices, sales representatives and distributors in numerous locations.

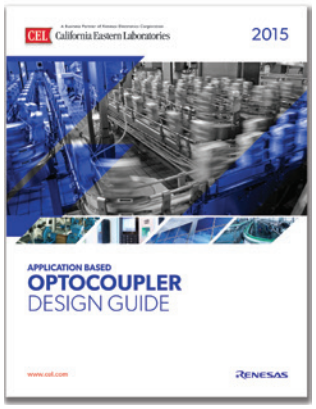

Also available:

Our **Application Based Optocoupler Design Guide**, the most comprehensive tool for selecting the right Optocoupler to use in our focus applications. We have made selecting the right optocoupler as easy as 1-2-3.

Download your copy at www.cel.com/Optocouplers

CEL California Eastern Laboratories

CEL Headquarters

4590 Patrick Henry Drive
Santa Clara, CA 95054
Tel: (408) 919-2500

www.cel.com

Contents

Optocouplers

Solid State Relays - SSRs

All information included in this document is current as of the printed date on back. Information is subject to change without notice. Please refer to datasheets or contact your local CEL representative.

For information visit **www.cel.com/optocouplers**

Optocouplers

Optocoupler Families Overview, Package Styles and Part Numbering System

Part Number	Description	Package Styles Available	Package Drawing Page
PS23XX Series	*Transistor Output*	*4 pin LSOP (2.54mm pin pitch)*	**24**
PS25XX Series	*Transistor Output*	*4 and 16 pin DIP and DIP SMT*	**23-25**
PS27XX Series	*Transistor Output*	*4 pin SOP (2.54mm pin pitch)*	**25**
PS28XX Series	*Transistor Output*	*4,12 and 16 pin SSOP (1.27mm pin pitch)*	**25-26**
PS29XX Series	*Transistor Output*	*4 pin Mini Flat (flat lead, 1.27mm pin pitch)*	**26**
PS81XX Series	*High Speed Analog*	*5 pin SOP (1.27mm pin pitch)*	**26**
PS83XX Series	*High Speed Analog*	*6 pin SDIP SMT*	**27**
PS85XX Series	*High Speed Analog*	*8 pin DIP and SMT DIP*	**24**
PS88XX Series	*High Speed Analog*	*SO8*	**26**
PS91XX Series	*High Speed Digital*	*5 pin SOP (1.27mm pin pitch)*	**26**
PS92XX Series	*High Speed Digital*	*5 pin SOP (1.27mm pin pitch)*	**26**
PS93XX Series	*High Speed Digital*	*6 pin SDIP SMT*	**27**
PS94XX Series	*High Speed Digital*	*16 pin SSOP*	**26**
PS95XX Series	*High Speed Digital*	*8 pin DIP and SMT DIP*	**24**
PS98XX Series	*High Speed Digital*	*SO8*	**26**
PS99XX Series	*High Speed Digital*	*8-pin LSDIP*	**27**

Channels

1	**One Channel**
2	**Two Channel**
4	**Four Channel**

Configuration Indentifier

CTR Rank

* **PSXX XX -X-XX-X-A**

* *This is intended to explain existing part numbers and is not to be used to create part numbers since not all combinations are available.*

Blank *Standard Part*

A or C	*Alternate Die Version*
D	*High Temperature Version*

Pb-Free

A	*SnBi Plating*
AX	*NiPdAu Plating*

Package Style

Blank	*Thru-Hole DIP, SOP, SSOP or Renesas Mini Flat*
L	*SMT DIP*
L1	*Thru-Hole DIP, Gull Wing**
L2,L3,L4	*SMT DIP Gull Wing* (see package drawings)*

**8mm Creepage versions available for selected parts.*

Tape & Reel Options

E3	*Small Reel*
F3	*Large Reel*

For details, download:
http://www.cel.com/pdf/misc/tape_reel.pdf

Transistor Output Series

Function		4-Pin DIP, 5KV iso	SOP, 3.75KV iso	Small SOP, 2.5 KV iso	4-Pin flat lead, 2.5 KV iso	12-Pin SSOP, 1.5 KV iso
Input	*Output*					
DC	*Single*	*PS2501*	*PS2381 (Long Creepage, 5KV iso)*	*PS2801C*	*PS2911*	*PS2841*
DC	*Single*	*PS2514*	*PS2701A*	*PS2811*	*PS2913*	-
DC	*Single*	*PS2561x*	*PS2703*	*PS2815*	–	-
DC	*Single*	-	*PS2711*	*PS2861B (3.75KV iso)*	–	-
DC	*Single*	-	*PS2761B*	–	–	-
DC	*Single*	-	–	–	–	-
DC	*Darlington*	*PS25x2*	*PS2702*	*PS2802*	–	-
DC	*Darlington*	*PS253x*	*PS2733 (2.5KV iso)*	*PS2833*	-	-
AC	*Single*	*PS25x5*	*PS2705A*	*PS2805C*	*PS2915*	*PS2845*
AC	*Single*	-	*PS2715*	*PS2815*	–	-
AC	*Darlington*	*PS2506*		-	-	-

IC Output

Function			8-Pin DIP 8mm Creepage, 5KV iso	5-Pin SOP, 3.75 KV iso	6-Pin SDIP, 8mm Creepage, 5KV iso	8-Pin Small SOP, 2.5 KV iso	8-Pin LSDIP, 7.5 KV iso
Category	**Speed**	**Output**					
High-Speed	*1Mbps*	*Analog*	*PS8501*	*PS8101*	*PS8302L (T_A = 110°C)*	–	-
High-Speed	*1Mbps*	*Analog*	*PS8502*	–	-	–	-
High-Speed	*1Mbps*	*Digital*	*PS9513*	*PS9113*	-	*PS9822-1/-2*	-
High-Speed	*1Mbps*	*Digital*	–	*PS9122*	*PS9313L (T_A = 110°C)*	–	-
High-Speed	*1Mbps*	*Digital*	–	-	–	–	-
High-Speed	*10Mbps*	*Digital*	*PS9587*	*PS9117A / PS9124*	*PS9317 / PS9324L*	*PS9817A-1/-2*	*PS9924*
High-Speed	*15Mbps*	*Digital*	–	*PS9121*	-	*PS9821-1/-2*	-
High-Speed	*15Mbps*	*CMOS*	–	*PS9151*	*PS9351L*	*PS9851-1/-2*	-
High-Speed	*15Mbps*	*Totem Pole Output*	–	*PS9123*	*PS9303L (Active High)*	–	-
Isolation Amplifier		*Analog*	*PS8551L4 / PS8551AL4*	–	–	–	-
		Digital	*PS9551AL4*	–	–	–	-

Motor Drive

Function		8-Pin DIP, 8mm Creepage	5-Pin SOP	6-Pin SDIP, 8mm Creepage	8-Pin SDIP, 8mm Creepage	8-Pin LSDIP, 14.5mm Creepage	16-Pin SSOP
Motor Drive (Inverter)		*PS9513*	*PS9113*	*PS9303L (Active high)* *PS9309L (Active high)*	–	–	
		–	–	*PS9313L (T_A=110°C)*	–	–	
Isolated Gate Driver	**0.6A**	*PS9506*	–	*PS9306L/PS9307AL*	–	–	
	2.0A	–	–	*PS9308L*	*PS9332L*	–	
	2.5A	*PS9531*	–	*PS9331L*	-	*PS9905*	*PS9402*

Recommended Optocouplers by Application

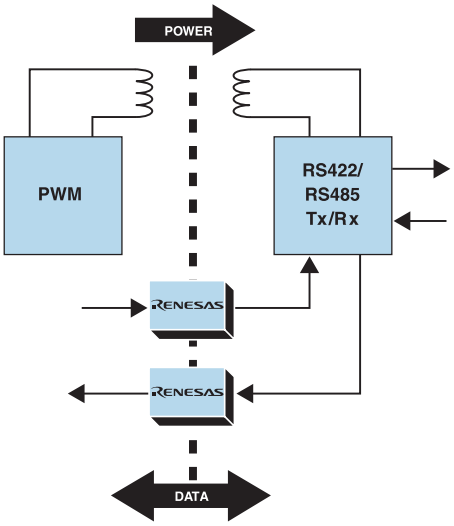

RS422/485 Interface Isolation

The RS485 serial communications standard is commonly used in data acquisition applications. The standard supports 32 drivers and receivers in a 2- or 4-wire differential configuration with cable lengths up to 4000 feet. Galvanic isolation becomes critical in the prevention of ground loops, electrical noise, and power spikes in widely distributed systems.

Application Requirements

- Wide range of data transfer rates: 1 Mbps to 15 Mbps
- High Common Mode Rejection Ratio (CMRR)
- Compact size
- Repeatability
- Reliability

Recommended Renesas Optocouplers

Tx/Rx Input/Output:
PS8302L, PS9122, PS9313L, PS9822-1, 2 *(1 Mbps)*
PS9124, PS9817A-1, 2, PS9324L, PS9587 *(10 Mbps)*
PS9121, PS9821-1, 2, PS9151, PS9351L, PS9851-1,2 *(15 Mbps)*

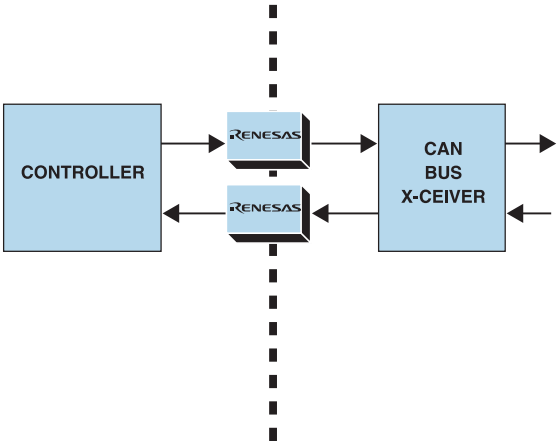

CAN Interface Isolation

Controller Area Network (CAN) is a serial communications bus popular in industrial applications. Point-to-point and multi-point systems use it to coordinate and synchronize events. Isolation is required in these distributed systems to protect against over-voltage transients, prevent ground loops, and reduce signal distortion.

Application Requirements

- Accurate signal timing
- High Common Mode Rejection Ratio (CMRR)
- Compact size
- Repeatability
- Reliability

Recommended Renesas Optocouplers

PS9151, PS9123, PS9351L, PS9851-1, 2, PS9121

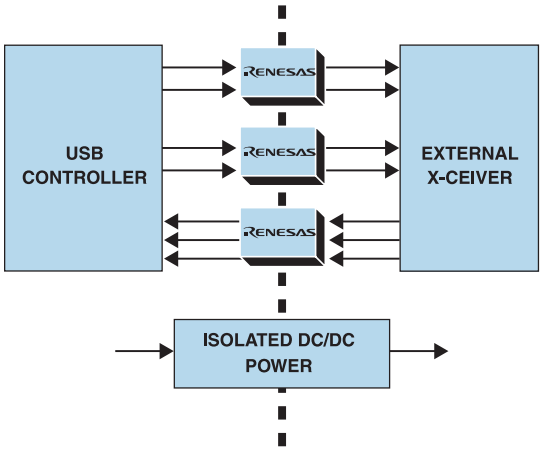

USB 2.0 Interface Isolation

USB is an inexpensive, high speed bus-integration interface used in computer-based systems. While the USB standard does not mandate isolation, designers recognize its importance in critical systems. Isolation protects USB interfaces from electrostatic discharge (ESD), ground loops, common mode noise, and EMI interference.

Application Requirements

- High CMRR
- Compact Size
- Low power consumption
- Data Transfer Rates: up to 15 Mbps
- Reliability

Recommended Renesas Optocouplers

PS9121, PS9123, PS9124, PS9151, PS9351L, PS9821-1, 2, PS9851-1, 2

Recommended Optocouplers by Application

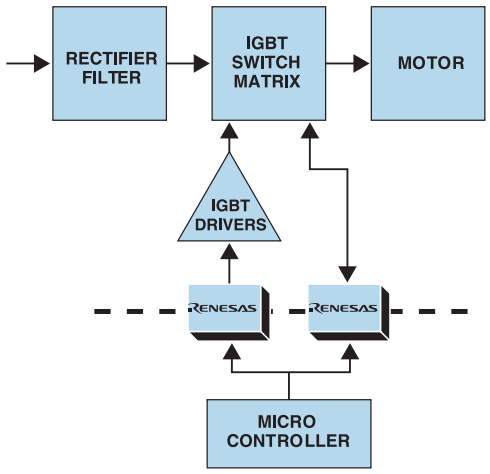

Motor Drive Control Isolation

Motor controllers combine low level logic with high voltage, high power electronics like Intelligent Power Modules (IPM). Isolation enables communication between the controllers and the drivers at both the high and low side power modules. Faults and other events are typically transferred across this isolation barrier as well.

Application Requirements

- Fast response time: <0.8µs
- High Common Mode Rejection Ratio (CMRR): >10kV/µs
- Isolation: typically 2500V AC - 5000V AC
- Long creepage: up to 8mm

Recommended Renesas Optocouplers

PS9113, PS9513, PS9506, PS9402, PS9905, PS9303L, PS9306L, PS9307AL, PS9308L, PS9309L, PS9313L, PS9331L, PS9332L, PS9531

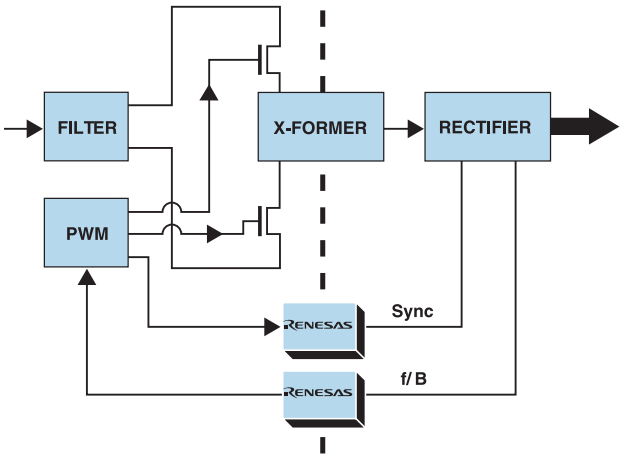

Power Supply Isolation

Power supplies are used in a wide variety of applications. Galvanic isolation is required for safety and to allow independent secondary side isolation. High speed optocouplers are used to transfer gate drive and synchronous rectification signals from the controller to the switching elements.

Application Requirements

- High temperature: up to 110°C
- Fast response time
- Low power consumption
- Compact size
- Repeatability

Recommended Renesas Optocouplers

Sync: **PS8501, PS8101, PS8302L**
Feedback: **PS2381, PS2561D, PS2761B, PS2861B** *(Transistor Optocouplers)*

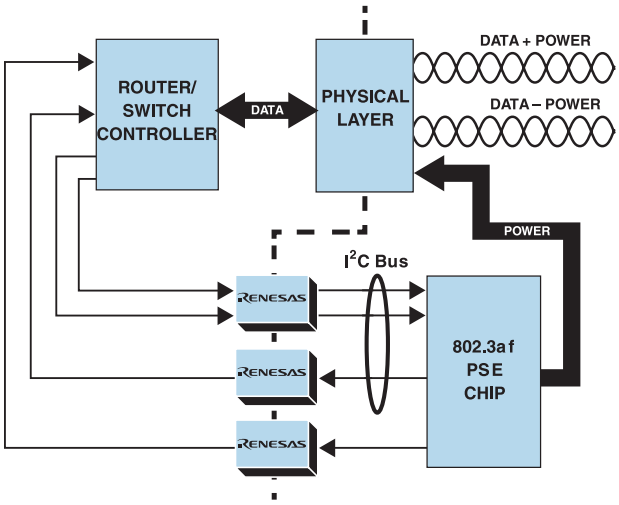

802.3af Power over Ethernet (PoE)

PoE offers a simple, reliable, cost effective solution for power transmission. It can deliver 13W of power over existing Ethernet cabling in applications ranging from industrial IT to home office networks. To ensure safety, the 802.3af standard requires 1500V AC of galvanic isolation between the main switch circuitry and the Media Dependent Interface (RJ-45 terminal). The communication from the switch to the PSE chip occurs over an isolated I²C bus.

Application Requirements

- 3.3V and 5V operation
- 1500VAC minimum isolation
- Small size
- Standard Mode (100 Kbps data rate)
- Fast Mode (400 Kbps data rate)
- Fast Mode + (1Mbps)
- High Speed (3.4 Mbps)

Recommended Renesas Optocouplers

PS9122 *(Standard Mode)*
PS9121, PS9122 *(Fast Mode)*
PS9121, PS9821-1, 2, PS9123 *(High Speed)*
PS9122, PS9822 *(Fast Mode +)*
PS2841-4, PS2911 *(Transistor Optocouplers)*

High Speed Digital Optocouplers

Package	Part Number	Speed (Mpbs)	Vcc Range (V) Recommended	Absolute Max Rating			Typical		Safety Certification[1]
				BV (Vr.m.s.)	Io (mA)	IF (mA)	t_{PHL} (ns)	t_{PLH} (ns)	
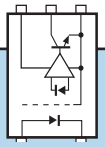	***Single channel, open collector output***								*Isolation for measurement equipment, plasma display panels and factory automation equipment*
SOP5	**PS9117A**	*10*	*4.5 to 5.5*	*3750*	*25*	*30*	*40*	*45*	*UL, VDE ,CSA*
SOP5	**PS9121**	*15*	*2.7 to 3.6*	*3750*	*25*	*30*	*40*	*45*	*UL, VDE, CSA*
SOP5[2]	**PS9122**	*1*	*N = 2.7 to 3.6* *L = 4.5 to 5.5*	*3750*	*20*	*25*	*500 max*	*700 max*	*UL, VDE*
SOP5	**PS9124**	*10*	*3.3 to 5.0*	*3750*	*25*	*25*	*40*	*45*	*UL, CSA, VDE*
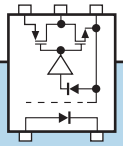 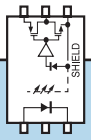 *PS9351L*	***Single channel, CMOS output, -40 to 100°C operation***								*Isolation for measurement equipment, plasma display panels and factory automation equipment*
SOP5	**PS9151**	*15*	*4.5 to 5.5*	*3750*	*2*	*20*	*35*	*35*	*UL, VDE*
SDIP6 Gull Wing	**PS9351L**	*15*	*4.5 to 5.5*	*5000*	*2*	*25*	*30*	*35*	*UL, CSA, VDE*
SDIP6 8mm Creepage	**PS9351L2**								
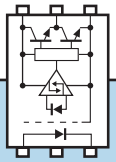 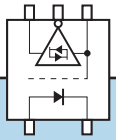 *PS9123*	***Single channel, totem pole output, -40 to 100°C operation***								*Isolation for IPM Drives, Inverters*
SDIP6 Gull Wing	**PS9303L**	*1*	*4.5 to 20*	*5000*	*25*	*20*	*185*	*240*	*UL, CSA, VDE*
SDIP6 8mm Creepage	**PS9303L2**								
SOP5	**PS9123**	*15*	*4.5 to 5.5*	*3750*	*13*	*20*	*28*	*32*	*UL, CSA, VDE*
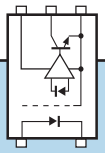	***Single channel, open collector output***								*Isolation for measurement equipment, plasma display panels and factory automation equipment*
SDIP6 Gull Wing	**PS9317L**	*10*	*4.5 to 5.5*	*5000*	*25*	*30*	*40*	*35*	*UL, CSA, VDE*
SDIP6 8mm Creepage	**PS9317L2**								
SDIP6 Gull Wing	**PS9324L**	*10*	*2.7 to 5.5*	*5000*	*25*	*25*	*40*	*50*	*UL ,CSA, SEMKO, VDE*
SDIP6 8mm Creepage	**PS9324L2**								

NOTES: 1. Other safety certifications available, see data sheet. 2. –40 to 100°C operation.

Continued next page

High Speed Digital Optocouplers *Continued...*

Package	Part Number	Speed (Mpbs)	Vcc Range (V) Recommended	Absolute Max Rating			Typical		Safety Certification[1]
				BV (Vr.m.s.)	Io (mA)	IF (mA)	t_{PHL} (ns)	t_{PLH} (ns)	
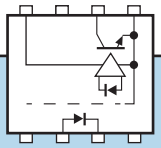	***Single channel, open collector output***								*Isolation for measurement equipment, plasma display panels and factory automation equipment*
DIP8 Thru-Hole	**PS9587**	*10*	*4.5 to 5.5*	*5000*	*25*	*30*	*35*	*45*	*UL, VDE, CSA, BSI, SEMKO, NEMKO, DEMKO, FIMKO*
DIP8 Thru-Hole 8mm Creepage	**PS9587L1**								
SMT DIP8 8mm Creepage	**PS9587L2**								
SMT DIP8 Gull Wing	**PS9587L3**								
SO8	**PS9817A-1**	*10*	*4.5 to 5.5*	*2500*	*25*	*20*	*40*	*45*	*UL, VDE*
SO8	**PS9821-1**	*15*	*2.7 to 3.6*	*2500*	*25*	*20*	*45*	*50*	*UL, VDE*
SO8	**PS9822-1**	*1*	*N = 2.7 to 3.6 L = 4.5 to 5.5*	*2500*	*25*	*20*	*500 max*	*700 max*	*UL, VDE*
8pin LSDIP	**PS9924**	*10*	*2.7 to 5.5*	*7500*	*25*	*25*	*45*	*40*	*UL, CSA, SEMKO, VDE*
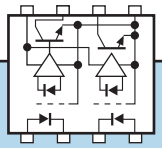	***Two channel, open collector output***								*Isolation for measurement equipment, plasma display panels and factory automation equipment*
SO8	**PS9817A-2**	*10*	*4.5 to 5.5*	*2500*	*25*	*15*	*40*	*45*	*UL, VDE*
SO8	**PS9821-2**	*15*	*2.7 to 3.6*	*2500*	*25*	*15*	*45*	*50*	*UL, VDE*
SO8	**PS9822-2**	*1*	*N = 2.7 to 3.6 L = 4.5 to 5.5*	*2500*	*25*	*15*	*500 max*	*700 max*	*UL, VDE*
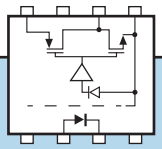	***Single channel, CMOS output***								*Isolation for measurement equipment, plasma display panels and factory automation equipment*
SO8	**PS9851-1**	*15*	*4.5 to 5.5*	*2500*	*2*	*20*	*34*	*37*	*UL, VDE*
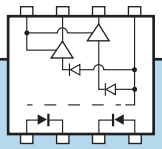	***Two channel, CMOS output***								*Isolation for measurement equipment, plasma display panels and factory automation equipment*
SO8	**PS9851-2**	*15*	*4.5 to 5.5*	*2500*	*2*	*20*	*34*	*37*	*UL, VDE*

NOTES: 1. Other safety certifications available, see datasheet.

Digital Optocouplers for IGBT and MOSFET Motor Drive Applications

Package	Part Number	Vcc Range (V)	t_{PHL}- t_{PLH} (ns) max	Typical t_{PHL} (ns)	Typical t_{PLH} (ns)	BV (Vr.m.s.)	Safety Certification
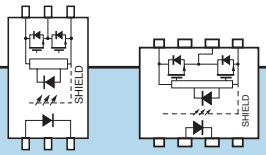 PS9531	***Single channel for MOSFET, IGBT driver isolation*** *Features - 2.5A Output Current, High CMR (25K-50KV/us), UVLO (Under Voltage Lockout) protection with hysteresis*						
SDIP6 Gull Wing	**PS9331L**	*15 to 30*	*90*	*105*	*80*	*5000*	*UL, CSA, SEMKO, VDE*
SDIP6 Gull Wing 8mm Creepage	**PS9331L2**						
DIP8 Thru-Hole	**PS9531**	*15 to 30*	*90*	*100*	*80*	*5000*	*UL, VDE, CSA, SEMKO*
DIP8 Thru-Hole 8mm Creepage	**PS9531L1**						
SMT DIP8 Gull Wing 8mm Creepage	**PS9531L2**						
SMT DIP8 Gull Wing	**PS9531L3**						
8-Pin LSDIP Gull Wing	**PS9905**	*15 to 30*	*100*	*100*	*90*	*7500*	*UL, CSA, SEMKO, VDE*

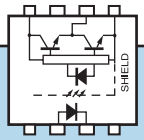	***Single channel for MOSFET, IGBT driver isolation*** *Features - 0.6A Output Current, High CMR(25kV/us)*						
DIP8 Thru-Hole	**PS9506**	*10 to 30*	*300*	*180*	*180*	*5000*	*UL, VDE, CSA*
DIP8 Thru-Hole 8mm Creepage	**PS9506L1**						
SMT DIP8 Gull Wing 8mm Creepage	**PS9506L2**						
SMT DIP8 Gull Wing	**PS9506L3**						

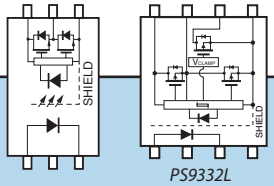 PS9332L	***Single channel for MOSFET, IGBT driver isolation, Industrial inverter, induction heating*** *Features - 2.0A Output Current, High CMR (25K-50kV/us), UVLO (Under Voltage Lock Out) protection with hysteresis*						
SDIP6 Gull Wing	**PS9308L**	*15 to 30*	*100*	*100*	*80*	*5000*	*UL, CSA, SEMKO, VDE*
SDIP6 Gull Wing 8mm Creepage	**PS9308L2**						
SDIP8 Gull Wing	**PS9332L**	*15 to 30*	*90*	*110*	*75*	*5000*	*UL,CSA, SEMKO, VDE*
SDIP8 Gull Wing 8mm Creepage	**PS9332L2**						

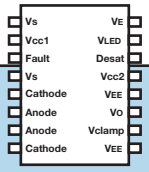	***Single channel for MOSFET, IGBT driver isolation, Industrial inverter, induction heating*** *Features - 2.5A Output Current, High CMR(25kV/us), UVLO (Under Voltage Lock Out) protection with hysteresis, desaturation detection, Miller clamping*						
16 pin SSOP	**PS9402**	*15 to 30*	*100*	*200*	*200*	*5000*	*UL, CSA, VDE*

Continued next page

Digital Optocouplers for IGBT and MOSFET Motor Drive Applications *Continued...*

Motor Drive Isolation

Motor drive applications demand more voltage and current than most ICs and microcontrollers can provide. A variety of devices have been developed to address the problem such as IGBTs, MOSFETs and Intelligent Power Modules (IPMs). These high power drivers use optocouplers to isolate other ICs and components from the power spikes and electrical noise that their motors generate.

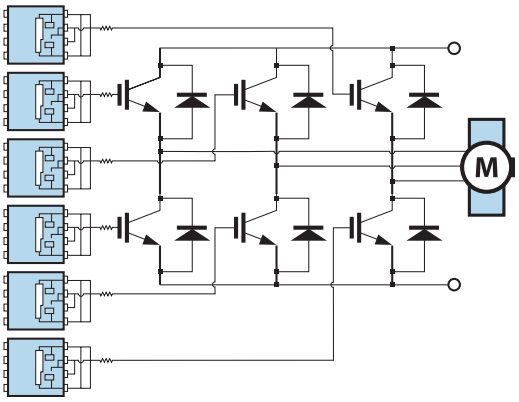

Package	Part Number	Vcc Range (V)	t_{PHL} - t_{PLH} (ns) max	Typical		BV (Vr.m.s.)	Safety Certification
				t_{PHL} (ns)	t_{PLH} (ns)		
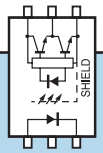 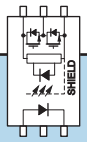 PS9307AL	***Single channel for MOSFET, IGBT driver isolation*** *Features - 0.6A Output Current, High CMR*						
6 pin SDIP Gull Wing	**PS9306L**	*10 to 30*	*300*	*180*	*180*	*5000*	*UL, VDE, CSA, SEMKO*
6 pin SDIP Gull Wing 8 mm Creepage	**PS9306L2**						
6 pin SDIP Gull Wing	**PS9307AL**	*10 to 30*	*80*	*100*	*100*	*5000*	*UL, CSA, VDE*
6 pin SDIP Gull Wing 8mm Creepage	**PS9307AL2**						

Digital High Functionality Optocouplers for Motor Drive Applications

Package	Part Number	Vcc Range (V) Recommended	Absolute Max Rating			Typical		Safety Certification[1]
			BV (Vr.m.s.)	Io (mA)	I_F (mA)	t_{PHL} (ns)	t_{PLH} (ns)	
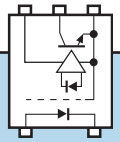 ***Single channel, open collector output, high temp operation*** *Isolation for intelligent power module drivers, inverters*								
SOP5[2]	**PS9113**	*4.5 to 20*	*3750*	*15*	*25*	*250*	*520*	*UL, VDE, CSA*
SDIP6 Gull Wing[3]	**PS9313L**	*4.5 to 20*	*5000*	*15*	*25*	*240*	*460*	*UL, VDE, CSA*
SDIP6 Gull Wing 8mm Creepage[3]	**PS9313L2**							

Continued next page

Digital High Functionality Optocouplers for Motor Drive Applications *Continued...*

Package	Part Number	Vcc Range (V) Recommended	Absolute Max Rating			Typical		Safety Certification[1]
			BV (Vr.m.s.)	Io (mA)	IF (mA)	t_{PHL} (ns)	t_{PLH} (ns)	
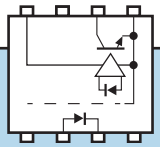 ***Single channel, open co llector output, –40 to 100°C operation***								*Isolation for intelligent power module drivers, inverters*
DIP8 Thru-Hole	**PS9513**	*4.5 to 20*	*5000*	*15*	*25*	*250*	*520*	*UL, VDE, CSA, BSI, SEMKO, NEMKO, DEMKO, FIMKO*
DIP8 Thru-Hole 8mm Creepage	**PS9513L1**							
SMT DIP8 Gull Wing 8mm Creepage	**PS9513L2**							
SMT DIP8 Gull Wing	**PS9513L3**							
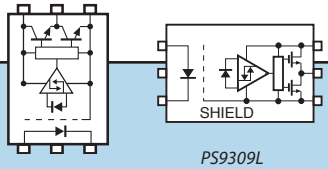 *PS9309L* ***Single channel, totem pole output***								*Isolation for intelligent power module drivers, inverters*
SMT DIP6 Gull Wing	**PS9303L**	*4.5 to 20*	*5000*	*25*	*20*	*185*	*240*	*UL, CSA, VDE*
SDIP 6 Gull Wing 8mm Creepage	**PS9303L2**							
SDID 6 Gull Wing	**PS9309L**	*4.5 to 20*	*5000*	*25*	*20*	*124*	*113*	*UL, CSA, SEMKO, VDE*
SDID 6 Gulling 8mm Creeoage	**PS9309L2**							

NOTES: 1. Other safety certifications available, see data sheet. 2. –40 to 100°C operation. 3. –40 to 110°C operation.

Isolation Amplifier – Digital

Package	Part Number	Vcc Range (V) Recommended	Input Supply Current I_{DD1} (mA max)	Output Supply Current I_{DD2} (mA max)	Resolution (ENOB)	Output Clock Frequency (MHz typ)	BV (Vr.m.s.)	Safety Certification[1]
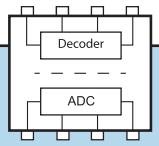 ***Digital isolation amplifier for motor drive applications***								*Isolation for intelligent power module drivers, inverters*
SMT DIP8 Gull Wing 8mm Creepage	**PS9551AL4**	*4.5 to 5.5*	*15*	*15*	*12*	*10*	*5000*	*UL, CSA, VDE, SEMKO*

NOTES: 1. Other safety certifications available, see data sheet.

Isolation Amplifier – Analog

Package	Part Number	Absolute Max Rating		Input Supply Current	Output Supply Current	Output Bandwidth	Gain	Gain Error	Safety Certification[1]
		BV (Vr.m.s.)	Vcc (V)	I_{DD1} (mA max)	I_{DD2} (mA max)	(kHz typ)	V/V (typ)	(%)	
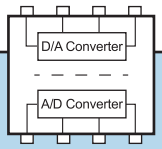 *Analog isolation amplifier for motor drive applications, –40 to 100°C operation*									
SMT DIP8 Gull Wing 8mm Creepage	**PS8551L4**	*5000*	*5.5*	*20*	*16*	*100*	*8*	*±3%*	*UL, CSA, BSI, VDE, SEMKO*
SMT DIP8 Gull Wing 8mm Creepage	**PS8551AL4**	*5000*	*5.5*	*16*	*16*	*100*	*8*	*±1%*	*UL, CSA, VDE, SEMKO*

NOTES: 1. Other safety certifications available, see data sheet.

High Speed Analog Optocouplers

Package	Part Number	Speed (Mbps)	Absolute Max Ratings				Typical		CTR[1] (N = Full range) Rank (%)	Safety Certification[2]
			BV (Vr.m.s.)	Vcc (V)	IC (mA)	IF (mA)	t_{PHL} (ns)	t_{PLH} (ns)		
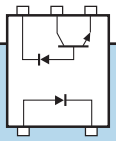 *Single channel for power supplies, inverters, computers, peripherals, –55 to 100°C operation*										
SOP5	**PS8101**	*1*	*3750*	*35*	*8*	*25*	*500*	*600*	N = 15 to 35 *K = 20 to 35*	*UL, CSA, VDE*
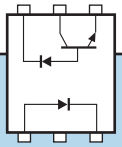 *Single channel for power supplies, inverters, computers, peripherals, –55 to 110°C operation*										
SDIP6 SMT Gull Wing	**PS8302L**	*1*	*5000*	*35*	*8*	*25*	*300*	*330*	*15 min*	*UL, VDE, CSA, SEMKO*
SDIP6 SMT Gull Wing 8mm Creepage	**PS8302L2**									
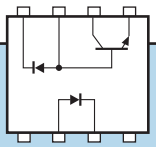 *Single channel for measurement and control equipment, modems, inverters, –55 to 100°C operation*										
DIP8 Thru-Hole	**PS8501**	*1*	*5000*	*35*	*8*	*25*	*220*	*350*	*15 min*	*UL, CSA, BSI, VDE, SEMKO*
DIP8 Thru-Hole 8mm Creepage	**PS8501L1**									
SMT DIP8 Gull Wing 8mm Creepage	**PS8501L2**									
SMT DIP8 Gull Wing	**PS8501L3**									

Continued next page

High Speed Analog Optocouplers *Continued...*

Package	Part Number	Speed (Mbps)	Absolute Max Ratings				Typical		CTR[1] (N = Full range) Rank (%)	Safety Certification[2]
			BV (Vr.m.s.)	Vcc (V)	IC (mA)	IF (mA)	t_{PHL} (ns)	t_{PLH} (ns)		
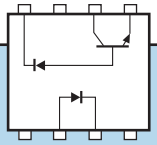 *Single channel for measurement and control equipment, modems, inverters, –55 to 100°C operation*										
DIP8 Thru-Hole	**PS8502**	*1*	*5000*	*35*	*8*	*25*	*220*	*350*	*15 min*	*UL, CSA, BSI, VDE, SEMKO*
DIP8 Thru-Hole 8mm Creepage	**PS8502L1**									
SMT DIP8 Gull Wing 8mm Creepage	**PS8502L2**									
SMT DIP8 Gull Wing	**PS8502L3**									

Single Transistor, General Purpose DC Optocouplers

Package	Part Number	Absolute Max Ratings				CTR (N = Full range) Rank (%)	Safety Certification
		BV (Vr.m.s.)	VCEO (V)	IF (mA)	IC (mA)		
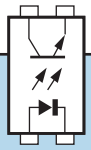 *Single channel DC device for low-speed logic applications*						*CTR measured @ VCE = 5V, IF = 5mA*	
SMT DIP4	**PS2501AL**	*5000*	*70*	*30*	*30*	**N = 50 to 400** *H = 80 to 160* *W = 130 to 260* *Q = 100 to 200* *L = 200 to 400*	*UL*
SMT DIP4	**PS2501L-1**	*5000*	*80*	*80*	*50*	**N = 80 to 600** *K = 300 to 600* *L = 200 to 400* *M = 80 to 240* *D =100 to 300* *H = 80 to 160* *W = 130 to 260* *Q = 100 to 200*	*UL*
SOP4 *For high temp applications see **PS2761B**, page 19*	**PS2701A**	*3750*	*70*	*30*	*30*	**N = 50 to 300** *P = 150 to 300* *L = 100 to 300* *M = 50 to 150*	*UL, CSA, BSI, VDE*
SSOP4 *For high temp applications see **PS2861B**, page 19*	**PS2801C-1**	*2500*	*80*	*30*	*30*	**N = 50 to 400** *L = 100 to 300* *M = 100 to 400* *P = 150 to 300*	*UL, VDE, CSA, BSI*

Continued next page

Single Transistor, General Purpose DC Optocouplers *Continued...*

Package	Part Number	Absolute Max Ratings				CTR (N = Full range) Rank (%)	Safety Certification
		BV (Vr.m.s.)	VCEO (V)	IF (mA)	IC (mA)		
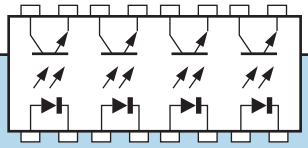	*Four channel DC device for low-speed logic applications*					*CTR measured @ VCE = 5V, IF = 5mA*	
SSOP16	**PS2801C-4**	*2500*	*80*	*30*	*30*	**N = 50 to 400** *M = 100 to 400*	*UL, CSA, BSI, VDE*

Single Transistor, General Purpose AC Optocouplers

Package	Part Number	Absolute Max Ratings				CTR (N = Full range) Rank (%)	Safety Certification
		BV (Vr.m.s.)	VCEO (V)	IF (mA)	IC (mA)		
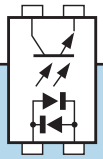	*Single channel AC devices with high isolation voltage*					*CTR measured @ VCE = 5V, IF = 5mA*	
DIP4 Thru-Hole	**PS2505-1**	*5000*	*80*	*± 80*	*50*	**N = 80 to 600**	*UL*
SMT DIP4	**PS2505L-1**						
SOP4	**PS2705A**	*3750*	*70*	*± 30*	*30*	**N = 50 to 300** *L = 100 to 300* *M = 50 to 150*	*UL, VDE, CSA*
SSOP4	**PS2805C-1**	*2500*	*80*	*± 30*	*30*	**N = 50 to 400** *M = 100 to 400*	*UL, VDE, CSA, BSI*
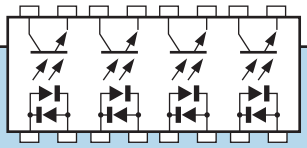	*Four channel AC devices with high isolation voltage*					*CTR measured @ VCE = 5V, IF = 5mA*	
SSOP16	**PS2805C-4**	*2500*	*80*	*± 30*	*30*	**N = 50 to 400** *M = 100 to 400*	*UL, VDE, CSA, BSI*

NOTE: Other safety certifications available, see datasheet.

Single Transistor DC & AC Optocouplers, Characterized for low input current (1 mA)

Package	Part Number	Absolute Max Ratings				CTR (N = Full range) Rank (%)	Safety Certification
		BV (Vr.m.s.)	VCEO (V)	IF (mA)	IC (mA)		
Single channel DC device optimized for power supply applications						*CTR measured @ VCE = 5V, IF = 1mA*	
SOP4	**PS2711**	*3750*	*40*	*50*	*40*	**N = 100 to 400** *K = 200 to 400* *L = 150 to 300* *M = 100 to 200*	*UL, VDE*
SSOP4	**PS2811-1**	*2500*	*40*	*50*	*40*	**N = 100 to 400** *K = 200 to 400* *L = 150 to 300* *M = 100 to 200*	*UL, VDE, CSA*
4 Pin Mini Flat	**PS2911**	*2500*	*40*	*50*	*40*	**N = 100 to 400** *K = 200 to 400* *L = 150 to 300* *M = 100 to 200*	*UL, VDE, BSI*
4 Pin Mini Flat	**PS2913**	*2500*	*120*	*50*	*30*	**N = 50 to 200** *K = 100 to 200* *L = 75 to 150* *M = 50 to 100*	*UL, VDE, BSI*

Single Transistor DC & AC Optocouplers, Characterized for low input current (1 mA) *Continued...*

Package	Part Number	Absolute Max Ratings				CTR (N = Full range) Rank (%)	Safety Certification
		BV (Vr.m.s.)	VCEO (V)	IF (mA)	IC (mA)		
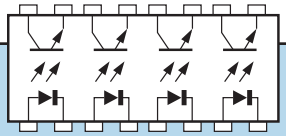	***Four channel DC device optimized for power supply applications***					*CTR measured @ VCE = 5V, IF = 1mA*	
SSOP16	**PS2811-4**	*2500*	*40*	*50*	*40*	**N = 100 to 400**	*UL, VDE, CSA*
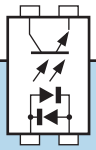	***Single channel AC devices optimized for power supply applications***					*CTR measured @ VCE = 5V, IF = ±1mA*	
SOP4	**PS2715**	*3750*	*40*	*±50*	*40*	**N = 100 to 400**	*UL, VDE, BSI, CSA*
SSOP4	**PS2815-1**	*2500*	*40*	*±50*	*40*	**N = 100 to 400**	*UL, VDE, CSA*
4 Pin Mini Flat	**PS2915**	*2500*	*40*	*±50*	*40*	**N = 100 to 400**	*UL, VDE, BSI*
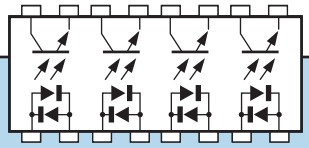	***Four channel AC device optimized for power supply applications***					*CTR measured @ VCE = 5V, IF = ±1mA*	
SSOP16	**PS2815-4**	*2500*	*40*	*±50*	*40*	**N = 100 to 400**	*UL, VDE*

Single Transistor DC Optocouplers, Guaranteed 0.4mm Insulation

Package	Part Number	Absolute Max Ratings				CTR (N = Full range) Rank (%)	Safety Certification[1]
		BV (Vr.m.s.)	VCEO (V)	IF (mA)	IC (mA)		
Single channel DC devices, high isolation voltage						*CTR measured @ VCE = 5V, IF = 5mA*	
4 pin LSOP stretched Gull Wing 8mm Creepage -40°C to +115°C operation	**PS2381**	*5000*	*80*	*60*	*50*	**N = 50 to 400** *L = 100 to 300* *M = 50 to 150* *W = 130 to 260*	*UL, VDE, CSA, CQC, SEMKO*
DIP4 Thru-Hole 110°C operation	**PS2561D**	*5000*	*80*	*40*	*50*	**N = 50 to 400** *H = 80 to 160* *L = 200 to 400* *Q = 100 to 200* *W = 130 to 260*	*UL, VDE, BSI, CSA, SEMKO, NEMKO, DEMKO, FIMKO*
SMT DIP4 110°C operation	**PS2561DL**						
DIP4 Thru-Hole Gull Wing 110°C operation	**PS2561DL1**						
SMT DIP4 Gull Wing 110°C operation	**PS2561DL2**						
DIP4 Thru-Hole 110°C operation	**PS2561F**	*5000*	*80*	*30*	*50*	*K = 300 to 600*	*UL*
SMT DIP4 Gull Wing 110°C operation	**PS25561FL**						
SOP4 110°C operation	**PS2761B**	*3750*	*70*	*25*	*40*	**N = 50 to 400** *K = 200 to 400* *M = 50 to 150* *L = 100 to 300*	*UL, BSI*
SSOP4 110°C operation	**PS2861B**	*3750*	*70*	*50*	*50*	**N = 50 to 300** **L= 100 to 300** **M = 50 to 150**	*UL, BSI, CSA, VDE, CQC, SEMKO, NEMKO, DEMKO, FIMKO*

NOTES: 1. Other safety certifications available, see datasheet.

Single Transistor, with internal base-emitter resistor to increase the switching time

Package	Part Number	Absolute Max Ratings				CTR (N = Full range) Rank (%)	Safety Certification
		BV (Vr.m.s.)	VCEO (V)	IF (mA)	IC (mA)		
Single channel DC device with internal base-emitter resistor to increase the switching time						*CTR measured @ VCE = 5V, IF = 5mA*	
DIP4 Thru-Hole	**PS2514**	*5000*	*40*	*30*	*20*	**N = 50 to 200**	*UL, VDE, CSA, CQC*
SMT DIP4	**PS2514L**						

Single Transistor AC Optocouplers, Guaranteed 0.4mm Insulation (BSI)

Package	Part Number	Absolute Max Ratings				CTR (N = Full range) Rank (%)	Safety Certification[1]
		BV (Vr.m.s.)	VCEO (V)	IF (mA)	IC (mA)		
Single channel AC devices, high isolation voltage						*CTR measured @ VCE = 5V, IF = 5mA*	
DIP4 Thru-Hole	**PS2565**	*5000*	*80*	*±80*	*50*	**N = 80 to 400**	*UL, VDE, BSI, CSA, SEMKO, NEMKO, DEMKO, FIMKO*
SMT DIP4	**PS2565L**						
DIP4 Thru-Hole Gull Wing	**PS2565L1**						
SMT DIP4 Gull Wing	**PS2565L2**						

NOTES: 1. Other safety certifications available, see datasheet.

Single Transistor, High Performance DC Optocouplers

Package	Part Number	Absolute Max Ratings				CTR (N = Full range) Rank (%)	Safety Certification
		BV (Vr.m.s.)	VCEO (V)	IF (mA)	IC (mA)		
Single channel DC devices, high VCE						*CTR measured @ VCE and IF as noted*	
SOP4	**PS2703**	*3750*	*120*	*50*	*30*	***VCE = 5V, IF = 5mA*** **N = 50 to 400** *K = 200 to 400* *L = 100 to 300* *M = 50 to 150*	*UL, VDE, BSI, CSA*
4 Pin Mini Flat	**PS2913**	*2500*	*120*	*50*	*30*	***VCE = 5V, IF = 1mA*** **N = 50 to 200** *K = 100 to 200* *L = 75 to 150* *M = 50 to 100*	*UL, VDE, BSI*

Single Transistor Optocouplers in Miniature Quad Packages

Package	Part Number	Absolute Max Ratings				CTR (N = Full range) Rank (%)	Safety Certification
		BV (Vr.m.s.)	VCEO (V)	IF (mA)	IC (mA)		
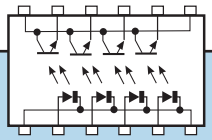 PS2841-4A 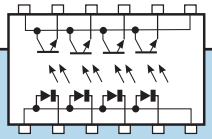 PS2841-4B	*Four channel, DC devices*					*CTR measured @ VCE = 0.4V, IF = 1mA*	
SSOP12	**PS2841-4A**	*1500*	*70*	*20*	*20*	**N = 100 to 400**	*UL*
SSOP12	**PS2841-4B**						
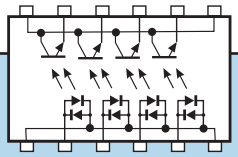	*Four channel, AC device*					*CTR measured @ VCE = 0.4V, IF = 1mA*	
SSOP12	**PS2845-4A**	*1500*	*70*	*±20*	*20*	**N = 100 to 400**	*UL*

Darlington Transistor, General Purpose Optocouplers

Package	Part Number	Absolute Max Ratings				CTR (N = Full range) Rank (%)	Safety Certification
		BV (Vr.m.s.)	VCEO (V)	IF (mA)	IC (mA)		
Single channel DC devices, high isolation voltage						*CTR measured @ VCE = 2V, IF = 1mA*	
DIP4 Thru-Hole	**PS2502-1**	*5000*	*40*	*80*	*200*	**N = 200** *min* *K = 2000 min* *L = 700 to 3400* *M = 200 to 1000*	*UL*
SMT DIP4	**PS2502L-1**						
SOP4	**PS2702-1**	*3750*	*40*	*50*	*200*	**N = 200** *min* *K = 2000 min* *L = 700 to 3400* *M = 200 to 1000*	*UL, VDE, BSI, CSA*
SSOP4	**PS2802-1**	*2500*	*40*	*50*	*90*	**N = 200 min** *K = 2000 min* *L = 700 to 3400* *M = 200 to 1000*	*UL, VDE, BSI, CSA*
Four channel DC devices, high isolation voltage						*CTR measured @ VCE = 2V, IF = 1mA*	
SSOP16	**PS2802-4**	*2500*	*40*	*50*	*100*	**N = 200 min**	*UL, VDE, BSI, CSA*
Single channel AC device, high isolation voltage						*CTR measured @ VCE = 2V, IF = ±1mA*	
DIP4 Thru-Hole	**PS2506**	*5000*	*40*	*±80*	*200*	**N = 200 min**	*UL*
SMT DIP4	**PS2506L**						

Darlington Transistor Optocouplers, Guaranteed 0.4mm insulation (BSI)

Package	Part Number	Absolute Max Ratings				CTR (N = Full range) Rank (%)	Safety Certification[1]
		BV (Vr.m.s.)	VCEO (V)	IF (mA)	IC (mA)		
Single channel DC device, high isolation voltage						*CTR measured @ VCE = 2V, IF = 1mA*	
DIP4 Thru-Hole	**PS2562**	*5000*	*40*	*80*	*200*	**N = 200 min** *K = 2000 to 3400* *L = 700 to 3400* *M = 200 to 1000*	*UL, VDE, BSI, CSA, NEMKO, SEMKO, DEMKO, FIMKO*
SMT DIP4	**PS2562L**						
DIP4 Thru-Hole Gull Wing	**PS2562L1**						
SMT DIP4 Gull Wing	**PS2562L2**						

NOTES: 1. Other safety certifications available, see datasheet.

Darlington Transistor, High VCEO DC Optocouplers

Package	Part Number	Absolute Max Ratings				CTR (N = Full range) Rank (%)	Safety Certification[1]
		BV (Vr.m.s.)	VCEO (V)	IF (mA)	IC (mA)		
Single channel DC devices						*CTR measured @ VCE = 2V, IF = 1mA*	
DIP4 Thru-Hole	**PS2533**	*5000*	*350*	*80*	*150*	**N = 1500 to 6500**	*UL, VDE, BSI, CSA*
SMT DIP4	**PS2533L**						
SOP4	**PS2733**	*2500*	*350*	*50*	*150*	**N = 1500 min**	*UL, VDE, BSI, CSA*
SSOP4	**PS2833-1**	*2500*	*350*	*50*	*60*	**N = 400 to 4500**	*UL, VDE, CSA*
Four channel DC device						*CTR measured @ VCE = 2V, IF = 1mA*	
SSOP16	**PS2833-4**	*2500*	*350*	*50*	*60*	**N = 400 to 4500**	*UL*
Single channel DC devices						*CTR measured @ VCE = 2V, IF = 1mA*	
DIP4 Thru-Hole	**PS2535**	*5000*	*350*	*50*	*120*	**N = 400 to 5500** L = 1500 to 5500	*UL, VDE, BSI*
SMT DIP4 Gull Wing	**PS2535L**						

Optocoupler Package Dimensions *Dimensions in millimeters. Dimensions are nominal, please refer to datasheets.*

DIP4 Thru-Hole

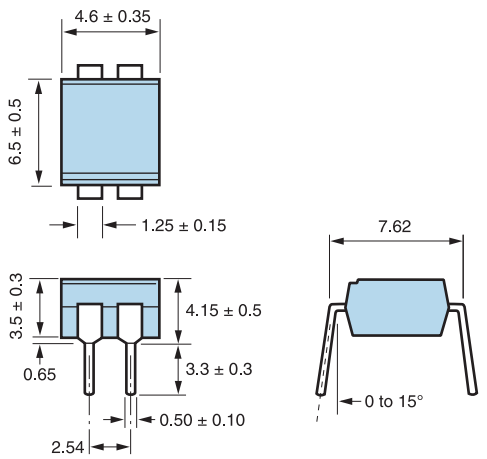

L — SMT DIP4

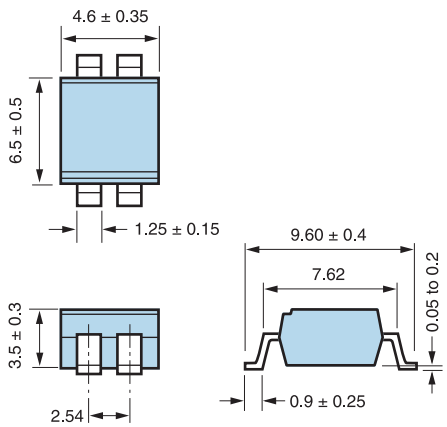

L1 — DIP4 Thru-Hole Gull Wing

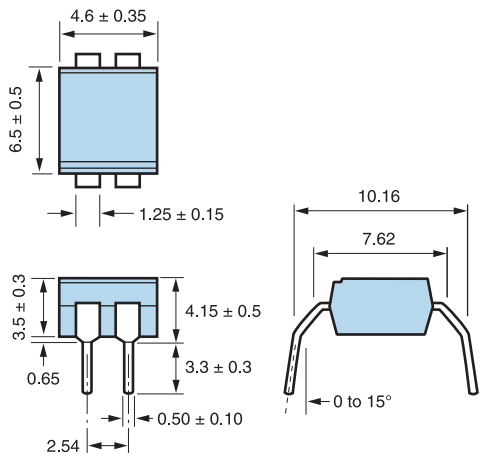

L2 — SMT DIP4 Gull Wing

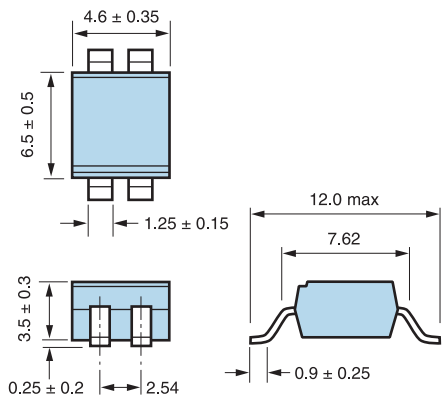

L1 — DIP4 Thru-Hole Gull Wing with 8mm Creepage

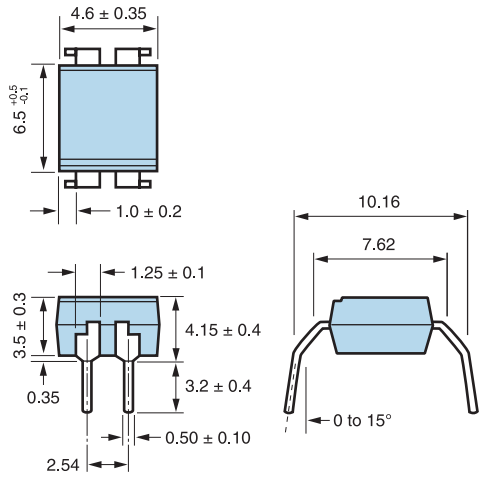

L2 — SMT DIP4 Gull Wing with 8 mm Creepage

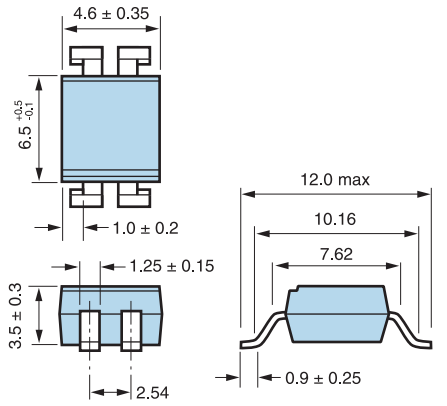

Optocoupler Package Dimensions *Continued...* *Dimensions in millimeters. Dimensions are nominal, please refer to datasheets.*

4-Pin LSOP

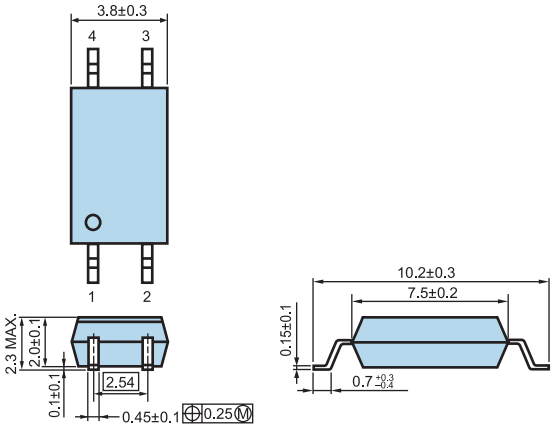

8-Pin SDIP

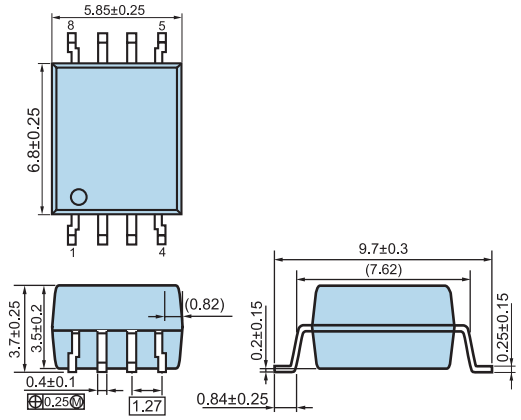

DIP8 Thru-Hole

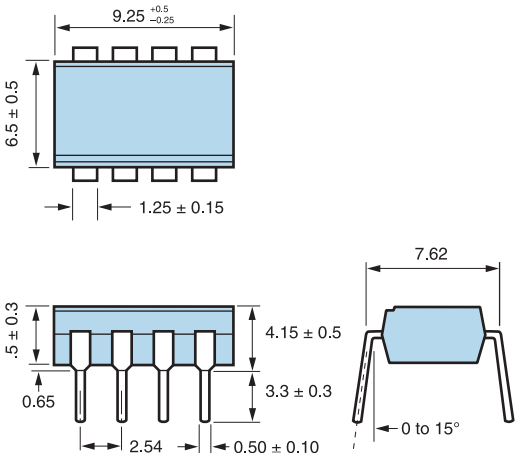

L — SMT DIP8

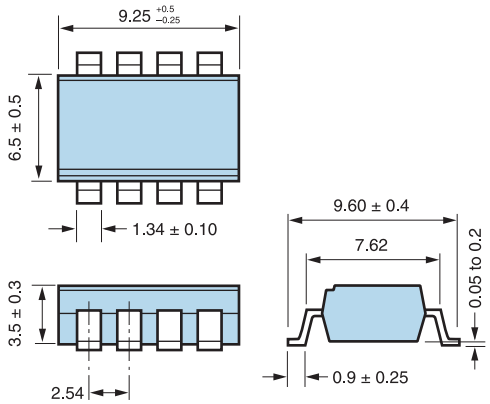

L1 — DIP8 Thru-Hole with 8mm Creepage

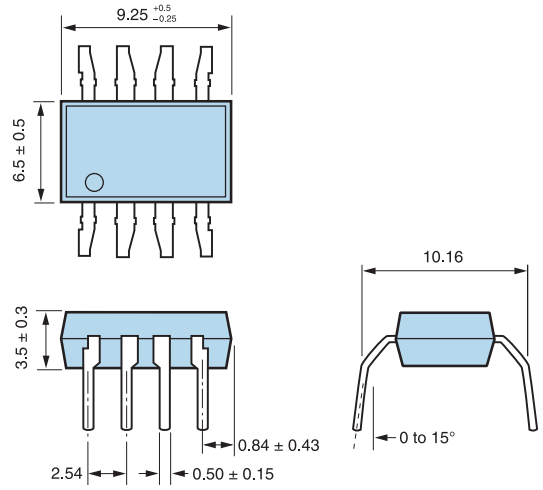

L2 — SMT DIP8 Gull Wing with 8mm Creepage

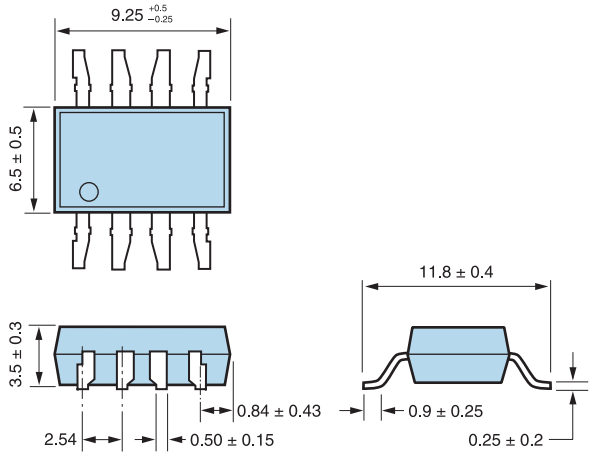

L3 — SMT DIP8 Gull Wing

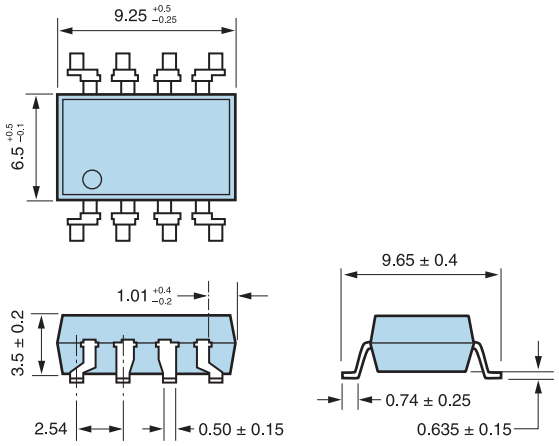

L4 — SMT DIP8 Gull Wing with 8mm Creepage

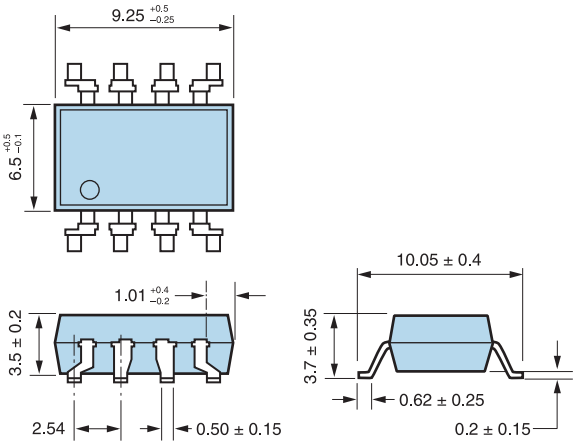

DIP16 Thru-Hole

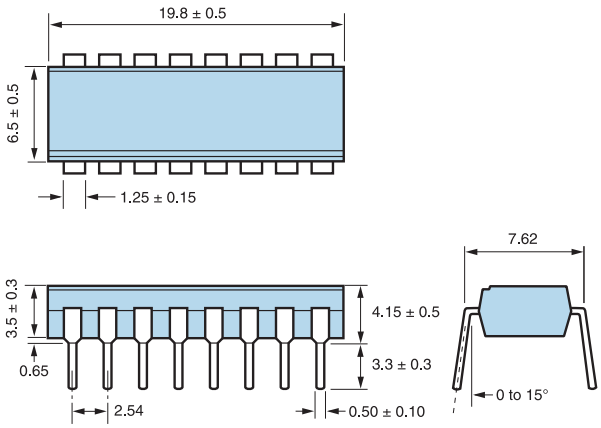

L — SMT DIP16

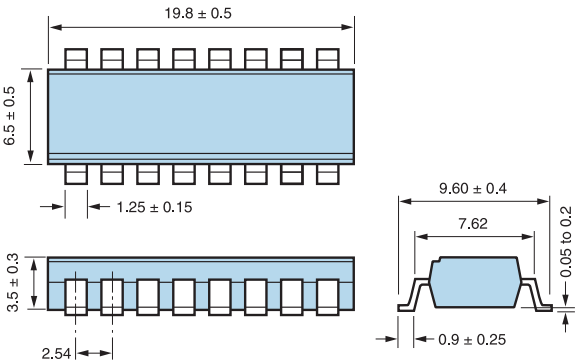

SOP4 2.54mm pin pitch

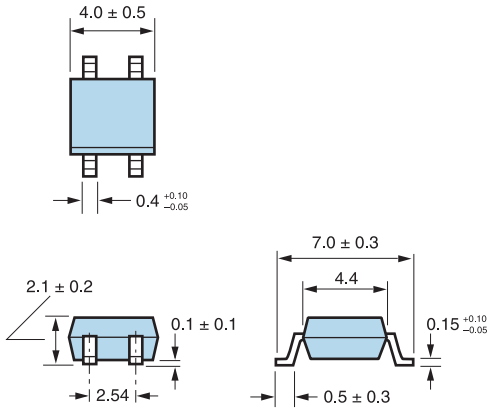

SSOP4 1.27mm pin pitch

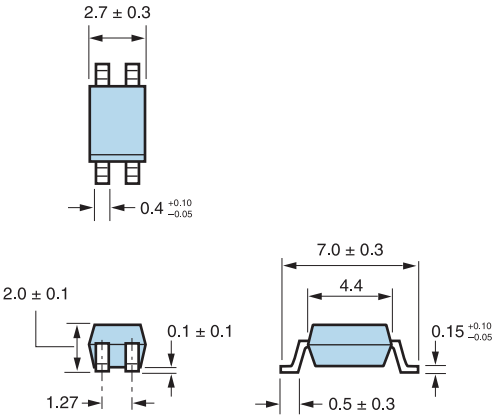

Optocoupler Package Dimensions *Continued...* *Dimensions in millimeters. Dimensions are nominal, please refer to datasheets.*

SOP5 1.27mm pin pitch

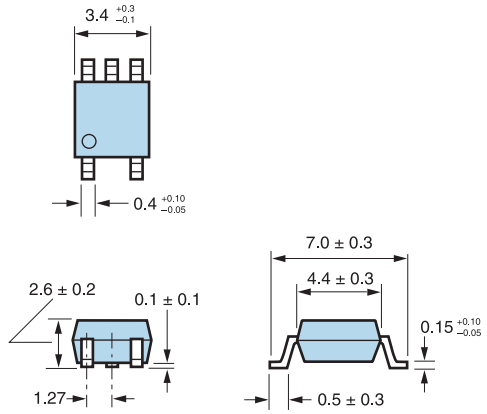

SOP5 1.27mm pin pitch with 5.5mm Creepage

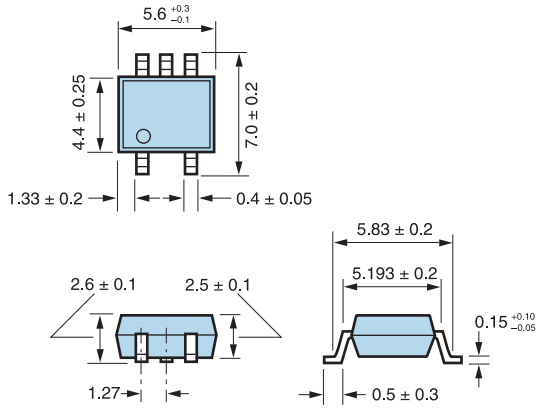

S08 1.27mm pin pitch

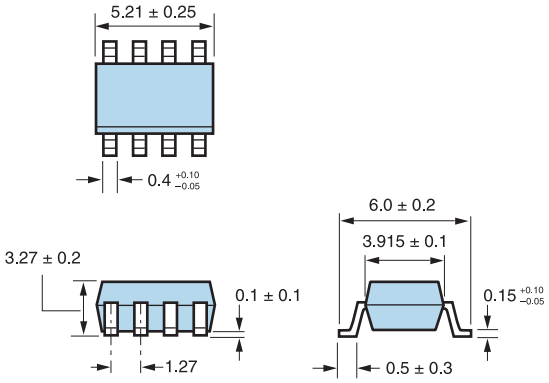

SSOP12 Mini Quad 1.27mm pin pitch

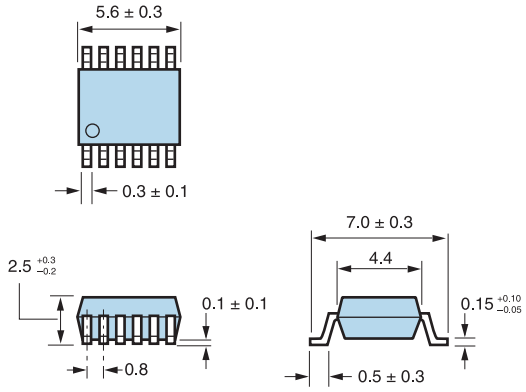

SSOP16 1.27mm pin pitch

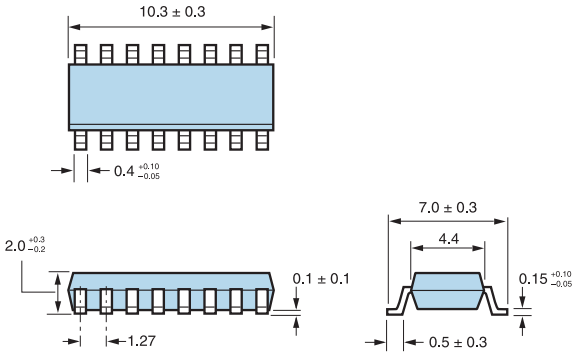

4-Pin Mini Flat

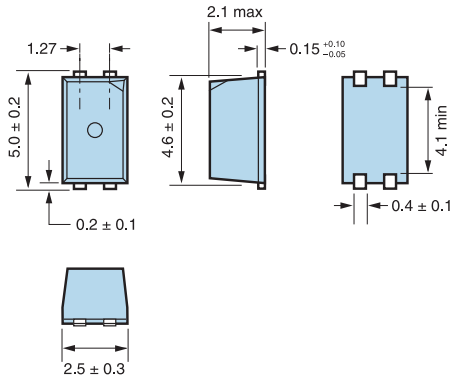

Optocoupler Package Dimensions *Continued...* *Dimensions in millimeters. Dimensions are nominal, please refer to datasheets.*

L — SDIP6 SMT Gull Wing

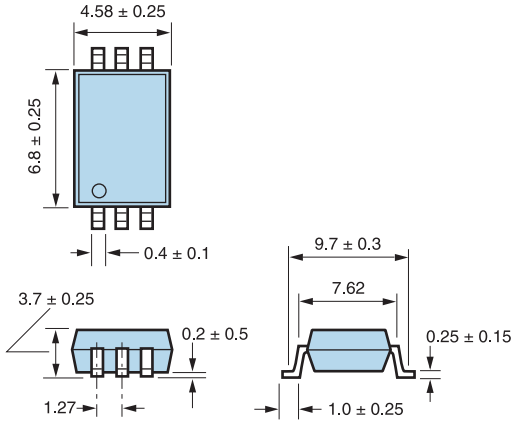

L2 — SDIP6 SMT Gull Wing with 8mm Creepage

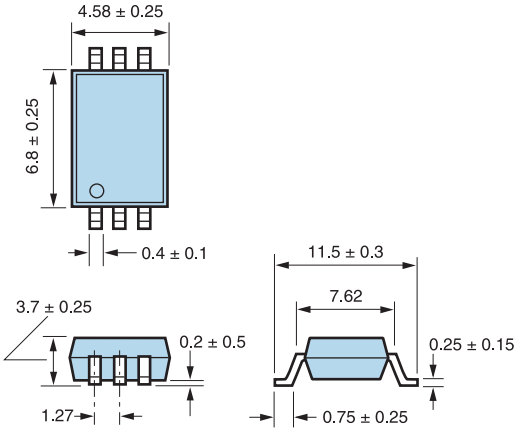

8-Pin LSDIP

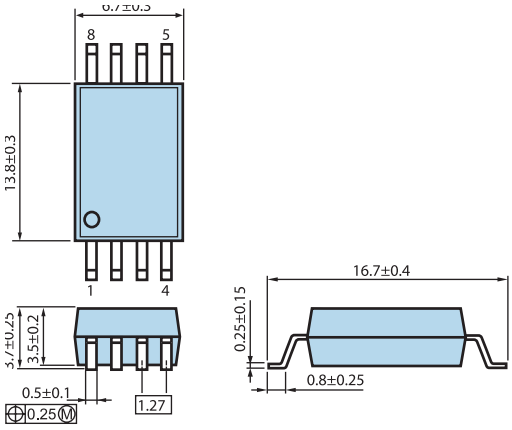

16-Pin SSOP

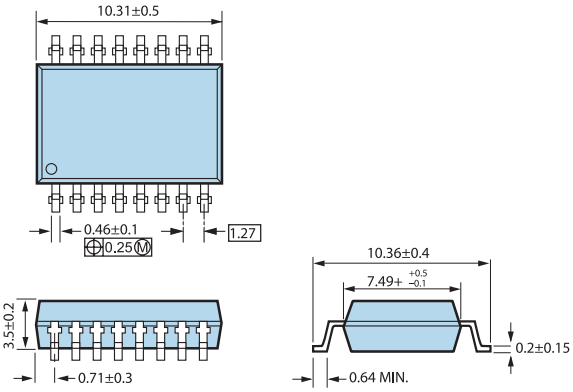

Mounting Pad Dimensions for Optocouplers & Solid State Relays

Package	A	B1	B2	C	D
Surface Mount DIP, SOP and SSOP Packages *(mm)*					
DIP (SMT) *4, 6, 8, 12, 16 Pin*	*8.2*	*-*	*2.54*	*1.7*	*2.2*
DIP (L2 – SMT) *4, 6, 8, 16 Pin*	*10.2*	*-*	*2.54*	*1.7*	*2.2*
SOP *4, 8, 16 Pin*	*6.25*	*-*	*2.54*	*0.8*	*1.45*
SOP *5 Pin*	*6.25*	*1.27*	*2.54*	*0.8*	*1.45*
SSOP 4, 16 Pin *1.27mm Pitch*	*6.25*	*-*	*1.27*	*0.8*	*1.45*
SSOP 8 Pin (SO-8) *1.27mm Pitch*	*5.25*	*-*	*1.27*	*0.8*	*1.45*
SSOP 12 Pin *0.8mm Pitch*	*6.25*	*-*	*0.8*	*0.5*	*1.45*
LSDIP *8 Pin*	*16.6*	*-*	*1.27*	*0.9*	*2*
SDIP *6 Pin*	*9.2*	*-*	*1.27*	*0.8*	*2.2*

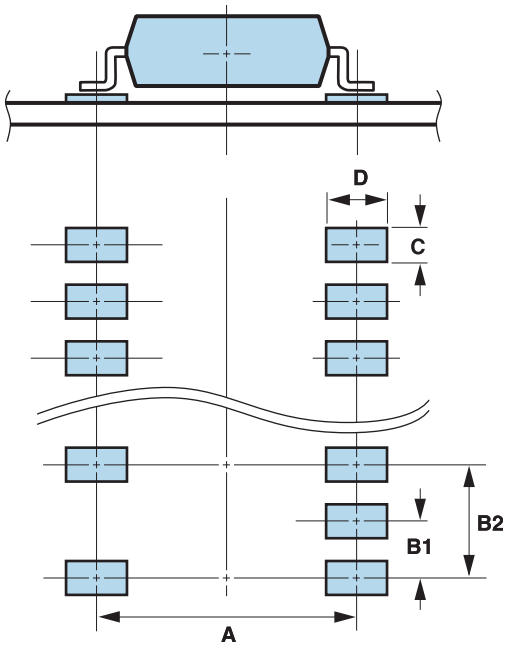

Package	A	B	C
Mini Flat Packages *(mm)*			
Optocoupler Version *PS29xx, 1.27mm Pitch*	*4.14*	*4.7*	*5.7*
SSR Version *PS78xx, 1.27mm Pitch*	*3.6*	*4.4*	*5.3*

NOTES: The Mini Flat package meets the 4.0mm air distance and outer creepage requirement.

All dimensions are subject to change without notice. Please contact CEL to ensure that you have the latest version of this document.

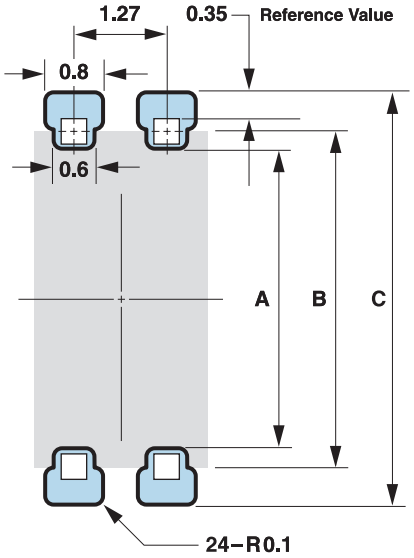

Solid State Relays

Solid State Relays — Introduction

Solid State Relays (SSRs) are semiconductor-based switching devices that operate optically rather than mechanically. They incorporate three major components: A GaAs LED on the input side, a photovoltaic diode array, and a FET switch on the output side. Renesas Solid State Relays are available in a standard *Normally Open* configuration:

FORM A "Normally Open"

In a FORM A relay, when no input current is present, the FET switch on the output side is nonconductive, or "open." When current is applied, the LED lights and the photovoltaic diode array responds by producing a voltage that's applied to the gates of the FET. When the gates' voltage threshold is reached the FET switch becomes conductive - or closes - effectively switching the relay's load. When the current is removed, the light stops and blocking diodes prevent charge from leaving the gates of the FET.

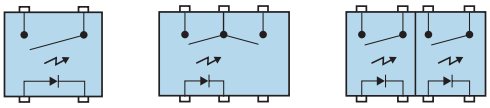

4 PIn | 6 PIn | 8 Pin Two Channel

As voltage from the photovoltaic array is reduced across the blocking diodes, it reaches a level that triggers a thyristor. The charge is then quickly removed from the gates and the FET goes nonconductive — returning the relay to its *Normally Open* state.

SOLID STATE RELAY: Basic Components

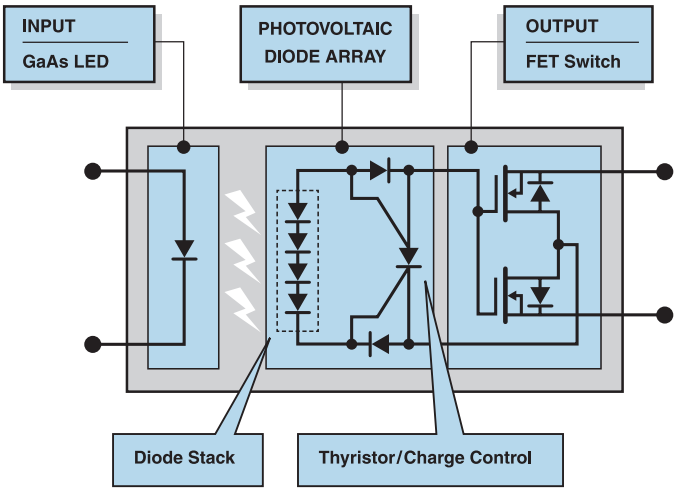

TYPICAL PIN CONFIGURATION

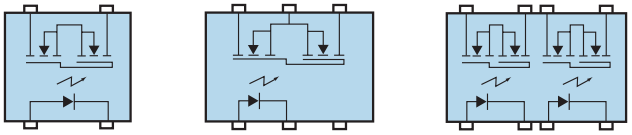

SOP4 & 4 Pin Mini Flat-Lead | DIP6 & SMT DIP6 | DIP8, SMT DIP8 & SOP8

Why switch from Electro-Mechanical Relays (EMRs) to Solid State Relays?

- **No moving parts**
- **High resistance to shock and vibration**
- **No arcing or contact bounce**
- **No Cross Talk**
- **Extremely fast**
- **Will switch AC or DC, output conduction is unrelated to input current levels**
- **Stable R_{ON} over the life of the device**
- **Proven reliability: 150X better than EMRs**

CEL offers a wide variety of Renesas SSRs for a broad range of applications: These include low CxR devices for high frequency signal control, low RON devices for high current control, and devices designed specifically to handle high voltages. SSR input logic is compatible with a variety of control schemes and can be driven directly by low voltage microcontrollers. With Renesas's broad product offering, it's easy to find an SSR that meets your specific needs.

Applications:

- **Telecom/Datacom**
- **Test & Measurement**
- **Programmable Logic Control**
- **Instrumentation**
- **Power Switching**
- **Motor Drive Interfaces**

Package Styles

Renesas SSRs are available in a variety of industry-standard DIP and SOP packages. Many are pin-for-pin compatible with other devices on the market.

For space-constrained designs Renesas offers a number of relays in a 4.6 x 2.64 x 1.85 mm Mini Flat-Lead package. The smallest in the industry, it enables extremely high placement densities, while its shortened signal paths help minimize the parasitic effects of the traces. See pages 37 and 38 for package drawings and dimensions.

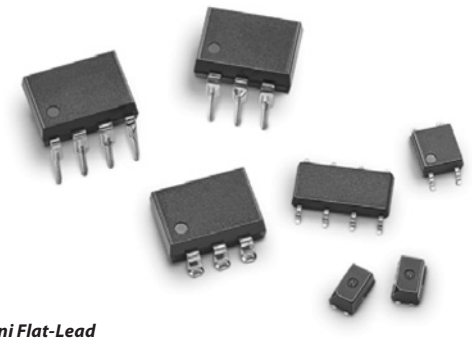

Renesas Mini Flat-Lead
SSR package is the industry's smallest

Manufacturing and Safety Certification

Renesas production line is located at Kyushu Denshi, Japan, where all processes,from initial die loading to final QA and package marking, are fully-automated. This helps to speed production and lower manufacturing costs, while assuring the superior quality and consistency you've come to expect from Renesas.

Renesas SSRs are typically UL, CSA, BSI and VDE Part 2 certified. Other international certifications are also available, please refer to data sheets or contact CEL for specifics.

Solid State Relay Product Families

POWER and INDUSTRIAL APPLICATIONS	**PS7113 Series** *High Current, Low RON devices in Thru-Hole and SMT DIP packages* **PS7206** *High Current, Low RON devices in SOP4 packages*
TELECOM APPLICATIONS *(Line Voltage)*	**PS7160, PS7360 Series** *600V Load Voltage devices in Thru-Hole and SMT DIP packages* **PS714x, PS724x, PS734x Series** *400V Load Voltage, 120 - 200mA Load Current devices in Thru- Hole and SMT DIP and SOP packages*
INSTRUMENTATION and ATE *(Automated Test Equipment)*	**PS7200 Series** *Low CxR devices in SOP4 packages* **PS780x Series** *Low CxR devices ultra-miniature Mini Flat-Lead packages*

SSR Part Numbering System

PS7X XX X X - XX - XX - A

Package Style

PS71	*6 or 8 Pin Thru-Hole & SMT DIP*
PS72	*4 & 8 Pin SOP*
PS73	*6 Pin Thru-Hole & SMT DIP*
PS78	*4 Pin Mini Flat-Lead*

Form

1A	*Single Channel FORM A (Normally Open) device*
2A	*Dual Channel FORM A device*

Configuration Indentifier

Variations

Blank	*Standard SSR*
A	*High Voltage/Low Capacitance SSR*
E	*High Linearity SSR*

Pb-Free

A	*SnBi Plating*
AX	*NiPdAu Plating*

Tape & Reel Options

E3	*Small Reel*
F3	*Large Reel*

For details, visit:
http://www.cel.com/eng/tape_reel.pdf

Lead Configuration

Blank
Standard DIP, SOP or Mini Flat-Lead package

"L" Designation
SMT DIP Gull Wing package

Product Lineup

Function	6-pin DIP (1-ch)	8-pin DIP (2-ch)	4-pin SOP (1-ch)	4-pin Mini Flat Lead
Standard Normally Open	*PS7113-1A* *PS7141E-1A* *PS7160-1A*	*PS7113-2A* *PS7141E-2A* *PS7160-2A*	*PS7241E-1A*	-
Low CxR	-	-	-	-
Low On-State Resistance	-	-	*PS7206-1A* *PS720C - 1A*	*PS7804-1A* *PS7802A-1A*
Low Offset Voltage	-	-	-	*PS7801-1A*
High Isolation Voltage	*PS7341-1A* *PS7360-1A*	-	-	-

SSRs for Power and Industrial Applications

In power and industrial applications, 6 pin SSRs can be configured to switch loads in a variety of ways. The Maximum Load Current specifications in the tables below are provided for these configurations:

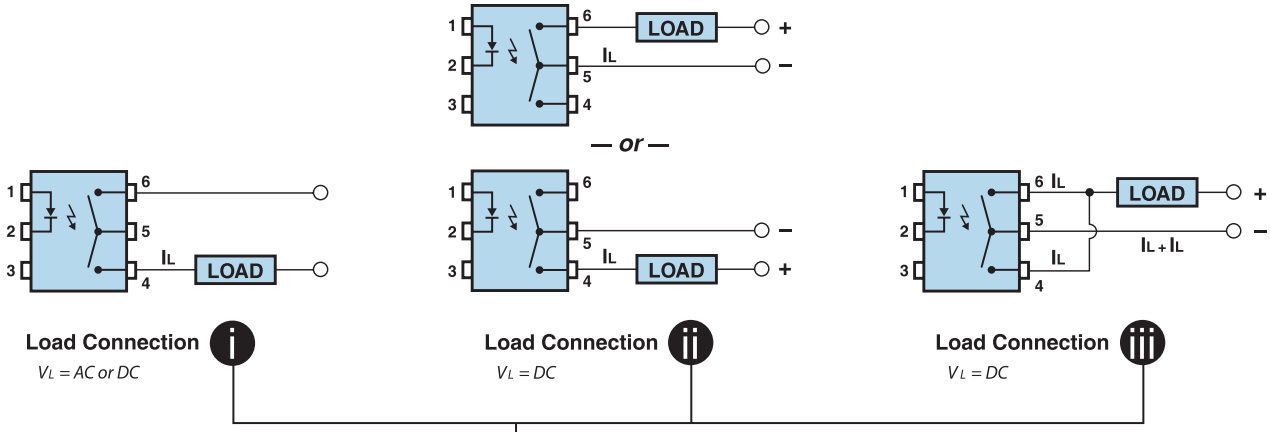

Package	Part Number	Form	Max. Load Current I_L (mA)	Breakdown Voltage V_L (V)	Typical Ratings				Safety Certification
					R_{ON} (Ω)	C_{OUT} (pF) Norm. Open	t_{ON} (ms)	t_{OFF} (ms)	
Single Channel, 1500 Vr.m.s. Isolation Voltage									
DIP6 Thru-Hole	**PS7113-1A**	*A*	i *350* ii *450* iii *700*	*100*	*0.9*	*250*	*1.3*	*0.06*	*UL, BSI, CSA*
SMT DIP6 Gull Wing	**PS7113L-1A**								
DIP6 Thru-Hole	**PS7160-1A**	*A*	i *90* ii *130* iii *200*	*600*	*42*	*110*	*0.8*	*0.06*	*UL, BSI, CSA*
SMT DIP6 Gull Wing	**PS7160L-1A**								
SOP4	**PS720C-1A**	*A*	*1250*	*60*	*0.1*	*230*	*2.0*	*0.05*	*UL*
SOP4	**PS7206-1A**	*A*	*600*	*60*	*0.6*	*70*	*0.4*	*0.08*	*UL, BSI*
Dual Channel, 1500 Vr.m.s. Isolation Voltage									
DIP8 Thru-Hole	**PS7113-2A**	*A*	i *350*	*100*	*0.9*	*250*	*1.3*	*0.06*	*UL, BSI, CSA*
SMT DIP8 Gull Wing	**PS7113L-2A**								
DIP8 Thru-Hole	**PS7160-2A**	*A*	i *90*	*600*	*42*	*110*	*0.8*	*0.06*	*UL, BSI, CSA*
SMT DIP8 Gull Wing	**PS7160L-2A**								
Single Channel, 3750 Vr.m.s. Isolation Voltage									
DIP6 Thru-Hole	**PS7360-1A**	*A*	i *90* ii *130* iii *200*	*600*	*41*	*110*	*0.6*	*0.03*	*UL, BSI, CSA, VDE, SEMKO, DEMKO, NEMKO, FIMKO*
SMT DIP6 Gull Wing	**PS7360L-1A**								

SSRs for Telecom Applications

Max Load Current specified using Load Connection ❶ (page 35) See individual data sheets for specifications for Load Connections ❷ & ❸

Package	Part Number	Form	Isolation Voltage BV (Vr.m.s.)	Max. Load Current I_L (mA)	Typical Ratings				Safety Certification
					R_{ON} (Ω)	C_{OUT} (pF) Norm. Open	t_{ON} (ms)	t_{OFF} (ms)	
Single Channel, 400V Breakdown Voltage									
DIP6 Thru-Hole	**PS7141E-1A**[1]	*A*	*1500*	*120*	*36*	*36*	*0.5*	*0.07*	*UL, BSI, SEMKO, DEMKO, NEMKO, FIMKO*
SMT DIP6 Gull Wing	**PS7141EL-1A**[1]								
SOP4	**PS7241E-1A**	*A*	*1500*	*120*	*22*	*50*	*0.5*	*0.07*	*UL, BSI, SEMKO, DEMKO, NEMKO, FIMKO*
DIP6 Thru-Hole	**PS7341-1A**	*A*	*3750*	*150*	*20*	*65*	*0.35*	*0.03*	*UL, BSI, CSA, SEMKO, DEMKO, FIMKO*
SMT DIP6 Gull Wing	**PS7341L-1A**[1]								
Two Channel, 400V Breakdown Voltage									
DIP8 Thru-Hole	**PS7141E-2A**	*A*	*1500*	*100*	*36*	*36*	*0.4*	*0.07*	*UL, BSI*
SMT DIP8Gull Wing	**PS7141EL-2A**								

NOTES: 1. High Linearity Relay.

SSRs for ATE and Instrumentation

Low CxR, miniature SOP and Mini Flat-Lead packages

Package	Part Number	Form	Max. Load Current I_L (mA)	Breakdown Voltage V_L (V)	Typical Ratings				Safety Certification
					R_{ON} (Ω)	C_{OUT} (pF) Norm. Open	t_{ON} (ms)	t_{OFF} (ms)	
Single Channel, 500 Vr.m.s. Isolation Voltage									
4 Pin Mini Flat-Lead	**PS7801-1A**	*A*	*100*	*40*	*10.5*	*1.2*	*0.02*	*0.15*	*UL*
4 Pin Mini Flat-Lead	**PS7802A-1A**	*A*	*250*	*40*	*1.1*	*11.5*	*0.05*	*0.05*	*UL*
4 Pin Mini Flat-Lead	**PS7804-1A**	*A*	*400*	*60*	*1.1*	*27*	*0.15*	*0.05*	*UL*

SSR Package Dimensions *Dimensions in millimeters. Dimensions are nominal, please refer to datasheets.*

DIP6 Thru-Hole

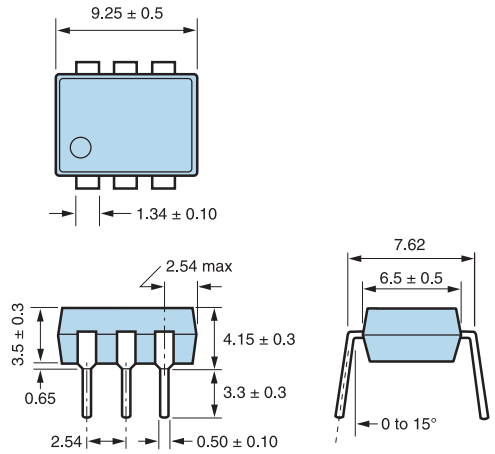

SMT DIP6 Gull Wing

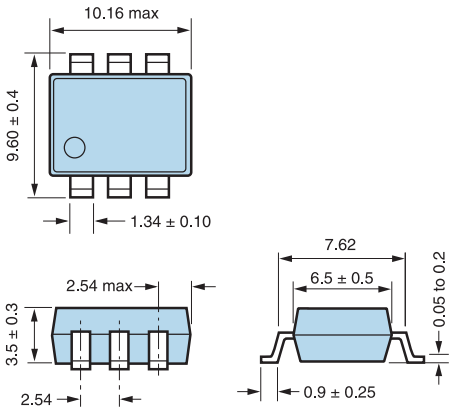

SSR Package Dimensions *Continued... Dimensions in millimeters. Dimensions are nominal, please refer to datasheets.*

DIP8 Thru-Hole

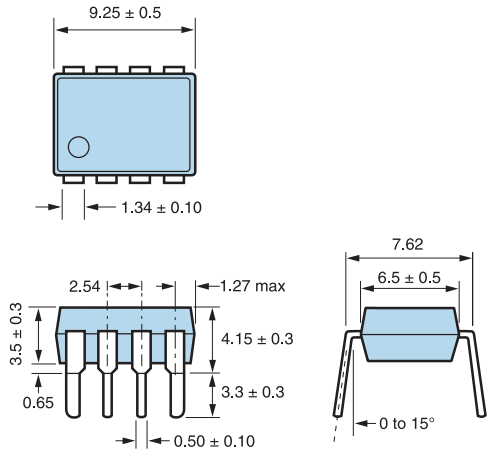

SMT DIP8 Gull Wing

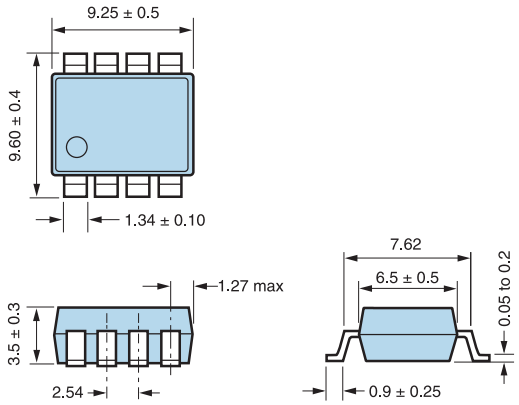

SOP4

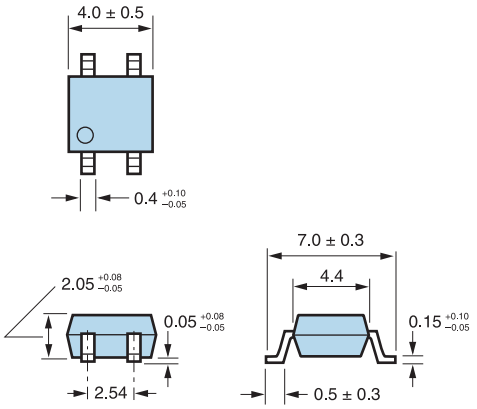

4-Pin Mini Flat-Lead

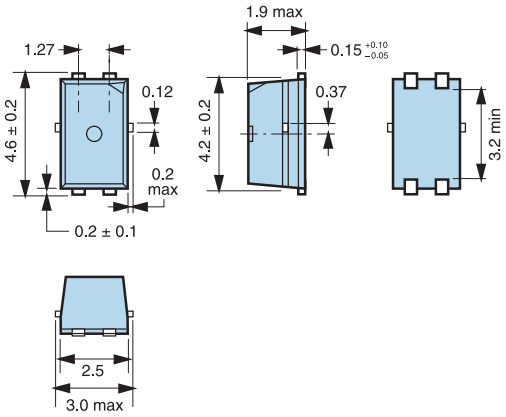

A Business Partner of Renesas Electronics Corporation.

California Eastern Laboratories

CEL Headquarters

4590 Patrick Henry Drive
Santa Clara, CA 95054
Tel: (408) 919-2500
E-mail: oc@cel.com

Learn more
www.cel.com/optocouplers

For a complete list of sales offices, representatives and distributors,
Please visit our website: **www.cel.com/contactus**