THIS DRAWING IS UNPUBLISHED. RELEASED FOR PUBLICATION - ,- .
© COPYRIGHT - By - ALL RIGHTS RESERVED.

LOC	DIST
—	—

REVISIONS

P	LTR	DESCRIPTION	DATE	DWN	APVD
	P	REV PER ECO 14-001211	1-27-13	CT	KH

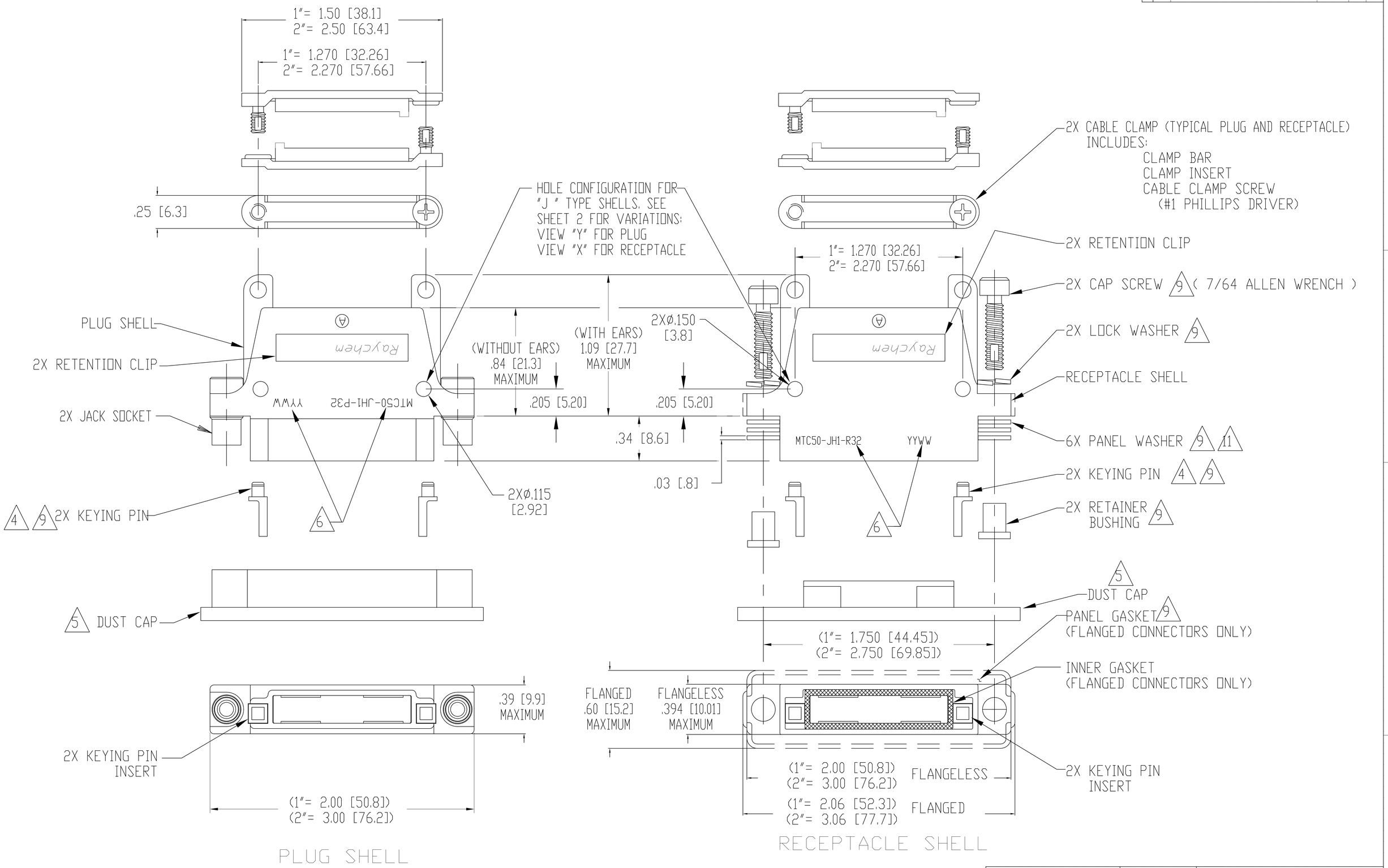

THIS DRAWING IS A CONTROLLED DOCUMENT.

DIMENSIONS: INCHES

TOLERANCES UNLESS OTHERWISE SPECIFIED:
0 PLC ± –
1 PLC ± –
2 PLC ± .02 [0.5]
3 PLC ± .005 [0.13]
4 PLC ± –
ANGLES ± –

MATERIAL –
FINISH –

DWN C.C.THOMAS 27JAN2014
CHK K.HOGAN 1-27-13
APVD K.HOGAN 1-27-13
PRODUCT SPEC —
APPLICATION SPEC —
WEIGHT —

TE Connectivity

NAME HOUSING ASSEMBLY,PLUG AND RECEPTACLE MTC50 SERIES

SIZE	CAGE CODE	DRAWING NO	RESTRICTED TO
A1	00779	C-MTC50-XHX-XXX-XXX	—

CUSTOMER DRAWING SCALE NTS SHEET 1 OF 2 REV P

4805 (3/11)
12:35pm

THIS DRAWING IS UNPUBLISHED. RELEASED FOR PUBLICATION – ,– .
© COPYRIGHT – By – ALL RIGHTS RESERVED.

LOC	DIST
—	—

REVISIONS

P	LTR	DESCRIPTION	DATE	DWN	APVD
	–	SEE SHEET #1	–	—	—

1. PART NUMBER VARIABLES: (NOT ALL POSSIBLE CONFIGURATIONS SHOWN ON THIS DRAWING ARE AVAILABLE AS STANDARD PRODUCTS. PLEASE CHECK WITH RAYCHEM TO CONFIRM AVAILABILITY.)

MTC50-XHX-XXX-XXX

- MODIFICATIONS: REFER TO APPLICABLE MOD DESCRIPTION SHEET. (THIS SPACE BLANK IF NO MODIFICATION IS APPLICABLE)
- 1= W/O CABLE CLAMP AND W/O EARS ON SHELL
  2= WITH CABLE CLAMP AND EARS ON SHELL
  3= W/O CABLE CLAMP BUT WITH EARS ON SHELL
  4= WITH FLAT CABLE CLAMP (SEE VIEW "V") AND EARS ON SHELL
- 1= BLACK ANODIZED (WHITE MARKING)
  2= ELECTROLESS NICKEL (BLACK MARKING)
  3= CADMIUM OVER NICKEL UNDERPLATE (BLACK MARKING)
- P= PLUG
  R= FLANGELESS RECEPTACLE
  F= FLANGED RECEPTACLE: STANDARD ("J" TYPE) HAS FLUOROSILICONE GASKET
  SHIELDED ("S" TYPE) HAS CONDUCTIVE GASKET
- 1= 1 INCH
  2= 2 INCH
- J= STANDARD
  S= SHIELDED
  Y= SPECIAL: REFER TO INDIVIDUAL SPECIFICATION CONTROL DRAWINGS FOR DESCRIPTIONS

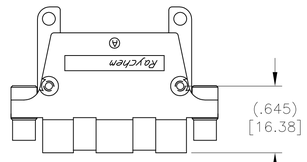

EME STYLE PLUG SHELL

VIEW "Y"

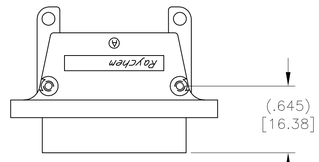

EME STYLE RECEPTACLE SHELL

VIEW "X"

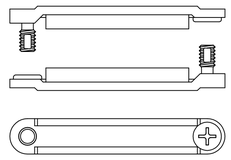

FLAT CABLE CLAMP

VIEW "V"

2. MATERIAL:

A) SHELL	ALUMINUM ALLOY PER ASTM B85
B) RETENTION CLIP	COPPER ALLOY 172 PER ASTM B194
C) CAP SCREW	STAINLESS STEEL PER SAE-AMS-QQ-S-763, 300 SERIES
D) JACK SOCKET OR JACK SCREW	STAINLESS STEEL PER SAE-AMS-QQ-S-763, 300 SERIES
E) PANEL OR LOCK WASHER	STAINLESS STEEL PER SAE-AMS-QQ-S-763, 300 SERIES
F) KEYING PIN	POLYARYLENE THERMOPLASTIC, MOLDED
G) KEY PINS INSERT	POLYARYLENE THERMOPLASTIC, MOLDED
H) CLAMP BAR	STAINLESS STEEL PER SAE-AMS-QQ-S-763, 300 SERIES
J) CLAMP INSERT	SILICONE ELASTOMER PER MIL-R-25988B
K) CAPTIVE SCREW	STAINLESS STEEL PER SAE-AMS-QQ-S-763, 300 SERIES

TABLE III 11

PANEL THICKNESS	NUMBER OF PANEL WASHERS FOR EACH FASTENER
0.031/0.036 [0.8]/[0.9]	2
0.062/0.067 [1.5]/[1.7]	1
0.093/0.097 [2.3]/[2.4]	0

3. FINISH:

	APPLIES TO NICKEL PLATED CONNECTORS	APPLIES TO CADMIUM PLATED CONNECTORS	APPLIES TO BLACK ANODIZED CONNECTORS
A) SHELL	NICKEL PLATED PER SAE-AMS-C-26074 CLASS 3, GRADE B	CADMIUM PLATED PER SAE-AMS-QQ-P-416 OVER NICKEL UNDERPLATE	BLACK ANODIZED PER MIL-A-8625, TYPE II, CLASS 2
B) RETENTION CLIP	NICKEL PLATED PER SAE-AMS-C-26074 CLASS 2, .00002 MINIMUM	CADMIUM PLATED PER SAE-AMS-QQ-P-416	NICKEL PLATED PER SAE-AMS-C-26074 CLASS 2, .00002 MINIMUM
C) CAP SCREW	PASSIVATED PER SAE-AMS-QQ-P-35	CADMIUM PLATED PER SAE-AMS-QQ-P-416	PASSIVATED PER SAE-AMS-QQ-P-35
D) JACK SOCKET OR JACK SCREW	PASSIVATED PER SAE-AMS-QQ-P-35	CADMIUM PLATED PER SAE-AMS-QQ-P-416	PASSIVATED PER SAE-AMS-QQ-P-35
E) PANEL OR LOCK WASHER	PASSIVATED PER SAE-AMS-QQ-P-35	CADMIUM PLATED PER SAE-AMS-QQ-P-416	PASSIVATED PER SAE-AMS-QQ-P-35
F) CLAMP BAR	PASSIVATED PER SAE-AMS-QQ-P-35	CADMIUM PLATED PER SAE-AMS-QQ-P-416	PASSIVATED PER SAE-AMS-QQ-P-35
G) CAPTIVE SCREW	PASSIVATED PER SAE-AMS-QQ-P-35	CADMIUM PLATED PER SAE-AMS-QQ-P-416	PASSIVATED PER SAE-AMS-QQ-P-35

TABLE II 10 WEIGHT lbs.[gr.] MAX.

CONNECTOR SIZE		PLUG	RECEPTACLE	
			FLANGED	FLANGELESS
1 INCH	W/EARS	.0514 [23.315]	.0731 [33.158]	.0606 [27.488]
	W/O EARS	.0422 [19.196]	.0555 [25.174]	.0430 [19.504]
2 INCH	W/EARS	.0765 [34.699]	.1292 [58.604]	.1021 [46.312]
	W/O EARS	.0494 [22.407]	.0851 [38.601]	.0580 [26.308]

4. APPLICATION INFORMATION:
   A) FOR RECEPTACLE MOUNTING INFORMATION, SEE RAYCHEM DRAWING D652-0012.
   B) FOR CONNECTOR KEYING CODES, SEE RAYCHEM DRAWING D-659-0080.
   C) RECEPTACLE CAP SCREWS ARE TO BE TORQUED TO 15 LBF-INCH (1.7 N-m).
   D) PLUG JACK SOCKETS ARE TO BE TORQUED TO 9 LBF-INCH (1.0 N-m).

5. DUST CAP SUPPLIED WITH EACH PLUG AND RECEPTACLE.

6. APPROPRIATE PART NUMBER AND DATE CODE ARE STAMPED APPROXIMATELY AS SHOWN.

7. THE APPLICABLE RAYCHEM SPECIFICATION FOR THIS PART IS C6111. THIS PART IS NOT QUALIFIED TO C6111.

8. FLANGED RECEPTACLE CONNECTORS CORRECTLEY ASSEMBLED AND THE PLUG CONNECTOR PROPERLY ASSEMBLED AND MATEDED WILL EXHIBIT AN AIR LEAK RATE NOT EXCEEDING .5 CC / SECOND AT 30 PSI AND 25° C. (APPLICABLE ONLY TO FLANGED RECEPTACLES WITH PIN INSERTS)

9. THESE ITEMS ARE SUPPLIED UNASSEMBLED.

10. SEE TABLE II FOR WEIGHTS. WEIGHTS SHOWN ARE WITHOUT DUST CAP.

11. THIS RECEPTACLE MAY BE REAR PANEL MOUNTED BY REMOVING AS MANY PANEL WASHERS AS REQUIRED TO ACCOMMODATE THE THICKNESS OF THE PANEL BEING USED. (SEE TABLE III)

12. THE CORRECT MATING PART FOR A RAYCHEM MTC50 PLUG SHELL IS A RAYCHEM MTC50 RECEPTACLE SHELL. THE SPECIFIED PERFORMANCE OF THIS CONNECTOR IS BASED ON TEST PERFORMANCE WHEN ASSEMBLED WITH THE CORRECT MATING PART.

THIS DRAWING IS A CONTROLLED DOCUMENT.

DIMENSIONS: INCHES

TOLERANCES UNLESS OTHERWISE SPECIFIED:
0 PLC ± –
1 PLC ± –
2 PLC ± .02 [0.5]
3 PLC ± .005 [0.13]
4 PLC ± –
ANGLES ± –

MATERIAL –
FINISH –

DWN C.C.THOMAS 27JAN2014
CHK K.HOGAN 1-27-13
APVD K.HOGAN 1-27-13
PRODUCT SPEC —
APPLICATION SPEC —
WEIGHT —

TE Connectivity

NAME HOUSING ASSEMBLY,PLUG AND RECEPTACLE MTC50 SERIES

SIZE	CAGE CODE	DRAWING NO	RESTRICTED TO
A1	00779	MTC50-XHX-XXX-XXX	—

CUSTOMER DRAWING SCALE NTS SHEET 2 OF 2 REV P

Mouser Electronics

Authorized Distributor

Click to View Pricing, Inventory, Delivery & Lifecycle Information:

TE Connectivity:

MTC50-SH1-R32 MTC50-JH1-P32 MTC50-JH2-P32 MTC50-SH1-F32 MTC50-JH1-R32