Cree® XLamp® MP-L EasyWhite® LEDs

PRODUCT DESCRIPTION

The XLamp MP-L EasyWhite LED eliminates traditional chromaticity binning and maximizes lumen density, enabling luminaire and bulb retrofit manufacturers to deliver consistent color and required light output to the target end user. XLamp MP-L EasyWhite LEDs can reduce LED-to-LED color variation to within a 2-step MacAdams ellipse around the desired color temperature, which is 94% smaller than the total area of the corresponding ANSI C78.377 color region.

The XLamp MP-L EasyWhite LED is the perfect choice for lighting applications where high luminous flux output is required from a single, small point source. Examples of specific applications include: commercial/retail display spotlights, LED retrofit bulbs, and other indoor general illumination applications.

FEATURES

- Cree EasyWhite color temperatures
- High lumen density
- Wide viewing angle: 125°
- Minimum 80 CRI at 2700 K and 3000 K CCT
- Electrically neutral thermal path
- RoHS- and REACh-compliant
- UL-recognized component (E349212)

APPLICATIONS

- Commercial/residential directional lighting
- LED retrofit bulbs
- General indoor/outdoor illumination

TABLE OF CONTENTS

Characteristics 2
Flux Characteristics..... 2
Relative Spectral Power Distribution..... 3
Electrical Characteristics..... 3
Relative Luminous Flux vs Current and Solder Point Temperature (Steady-State Conditions)..... 4
Typical Spatial Distribution..... 4
Reflow Soldering Characteristics .. 5
Bin and Order-Code Format 6
Performance Groups – Brightness 7
Performance Groups – Chromaticity 7
Cree EasyWhite Color Temperatures Plotted on the 1931 CIE Curve..... 8
Standard Order Codes and Bins... 9
Notes..... 10
Mechanical Dimensions..... 12
Tape and Reel 13
Packaging..... 14

Copyright © 2010-2013 Cree, Inc. All rights reserved. The information in this document is subject to change without notice.
Cree®, the Cree logo, XLamp® and EasyWhite® are registered trademarks of Cree, Inc.

Cree, Inc.
4600 Silicon Drive
Durham, NC 27703
USA Tel: +1.919.313.5300

CHARACTERISTICS

Characteristics	Unit	Minimum	Typical	Maximum
Solder Point Temperature	°C			110
Viewing Angle (FWHM) - white	degrees		125	
Temperature Coefficient of Voltage (per LED string)	mV/°C		-30	
ESD Classification (HBM per Mil-Std-883D)			Class 2	
Total Power, all strings @ 150 mA	W		11.3	
Total Power, all strings @ 250 mA	W		19.9	
DC Forward Current, per LED string	mA			250
Reverse Current, per LED string	mA			0.1
Forward Voltage @ 150 mA, per LED string	V		25.0	26.0
Forward Voltage @ 250 mA, per LED string	V		26.5	27.5

FLUX CHARACTERISTICS @ 150 mA (T_J = 25 °C)

The following table provides several base order codes for XLamp MP-L EasyWhite LEDs. For additional order codes, as well as a complete description of the order-code nomenclature, please reference pages 6 through 9 of this document.

Color	CCT Range	Base Order Codes Min. Luminous Flux (lm)		Order Code
		Group	Flux (lm)	
EasyWhite 4-Step	4000 K	D0	900	MPLEZW-A1-0000-0000D040F
		E0	1000	MPLEZW-A1-0000-0000E040F
	3500 K	B0	700	MPLEZW-A1-0000-0000B035F
		C0	800	MPLEZW-A1-0000-0000C035F
	3000 K	B0	700	MPLEZW-A1-0000-0000B030F
		C0	800	MPLEZW-A1-0000-0000C030F
	2700 K	B0	700	MPLEZW-A1-0000-0000B027F
		C0	800	MPLEZW-A1-0000-0000C027F

Color	CCT Range	Base Order Codes Min. Luminous Flux (lm)		Order Code
		Group	Flux (lm)	
EasyWhite 2-Step	4000 K	D0	900	MPLEZW-A1-0000-0000D040H
		E0	1000	MPLEZW-A1-0000-0000E040H
	3500 K	B0	700	MPLEZW-A1-0000-0000B035H
		C0	800	MPLEZW-A1-0000-0000C035H
	3000 K	B0	700	MPLEZW-A1-0000-0000B030H
		C0	800	MPLEZW-A1-0000-0000C030H
	2700 K	B0	700	MPLEZW-A1-0000-0000B027H
		C0	800	MPLEZW-A1-0000-0000C027H

Notes:

- Cree maintains a tolerance of ±7% on flux and power measurements, ±0.005 on chromaticity (CCx, CCy) measurements and ±2 on CRI measurements.
- Minimum CRI for EasyWhite color temperatures 27F, 27H, 30F, 30H is 80.
- Minimum CRI for EasyWhite color temperatures 35F, 35H, 40F, 40H is 77.
- Typical CRI for EasyWhite color temperatures 35F, 35H, 40F, 40H is 80.

Copyright © 2010-2013 Cree, Inc. All rights reserved. The information in this document is subject to change without notice. Cree®, the Cree logo, XLamp® and EasyWhite® are registered trademarks of Cree, Inc.

RELATIVE SPECTRAL POWER DISTRIBUTION (I_F = 150 mA PER LED)

The following graph represents typical spectral output of the XLamp MP-L EasyWhite LED with all LEDs on simultaneously.

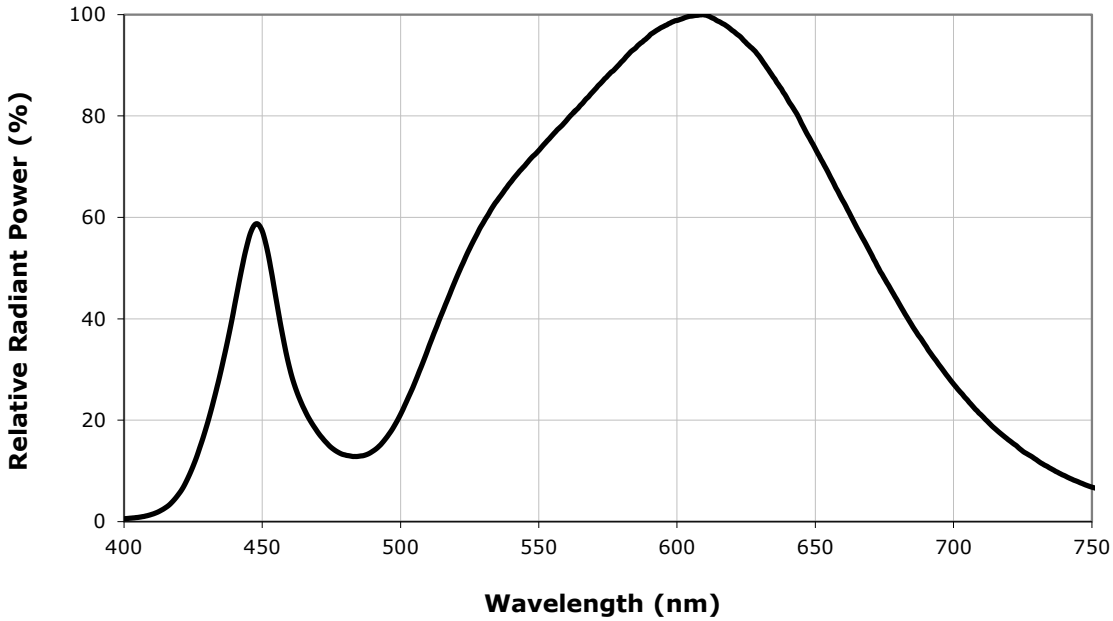

ELECTRICAL CHARACTERISTICS (T_J = 25 °C)

The following graph represents typical electrical characteristics of an individual string of XLamp MP-L EasyWhite LEDs.

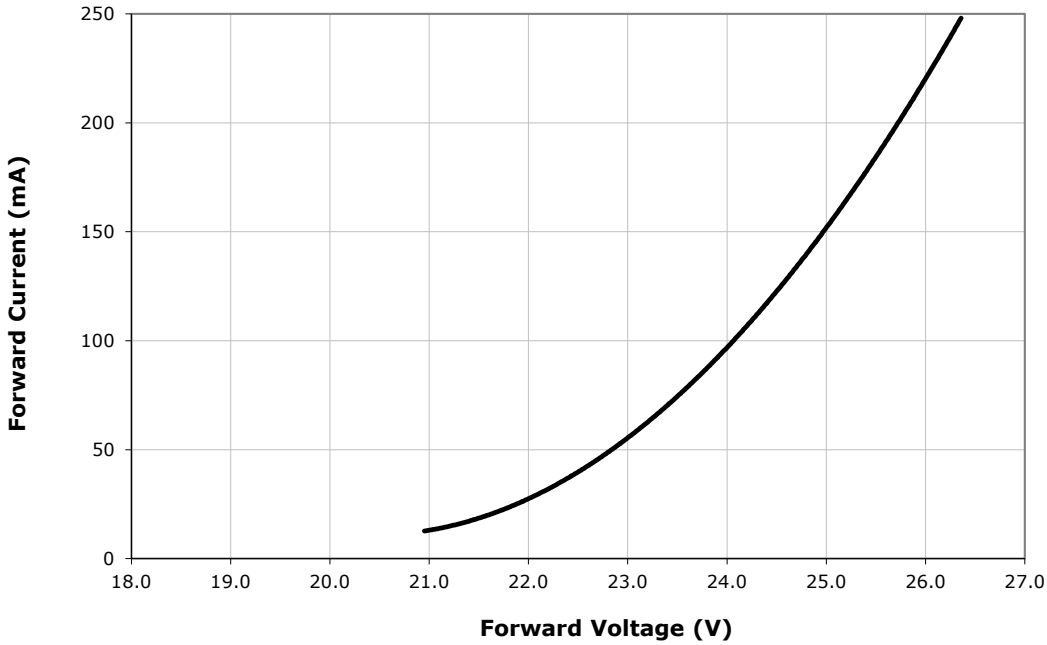

Copyright © 2010-2013 Cree, Inc. All rights reserved. The information in this document is subject to change without notice. Cree®, the Cree logo, XLamp® and EasyWhite® are registered trademarks of Cree, Inc.

RELATIVE LUMINOUS FLUX VS CURRENT AND SOLDER POINT TEMPERATURE (STEADY-STATE CONDITIONS)

The data below is representative of the XLamp MP-L EasyWhite in steady-state operation with all strings driven equally at the current shown. The relative luminous flux is shown as a percentage of the light output under pulsed test conditions (t=20 ms, If=150 mA, Tsp=Tj=25 °C). The XLamp MP-L EasyWhite LED is binned under these pulsed test conditions.

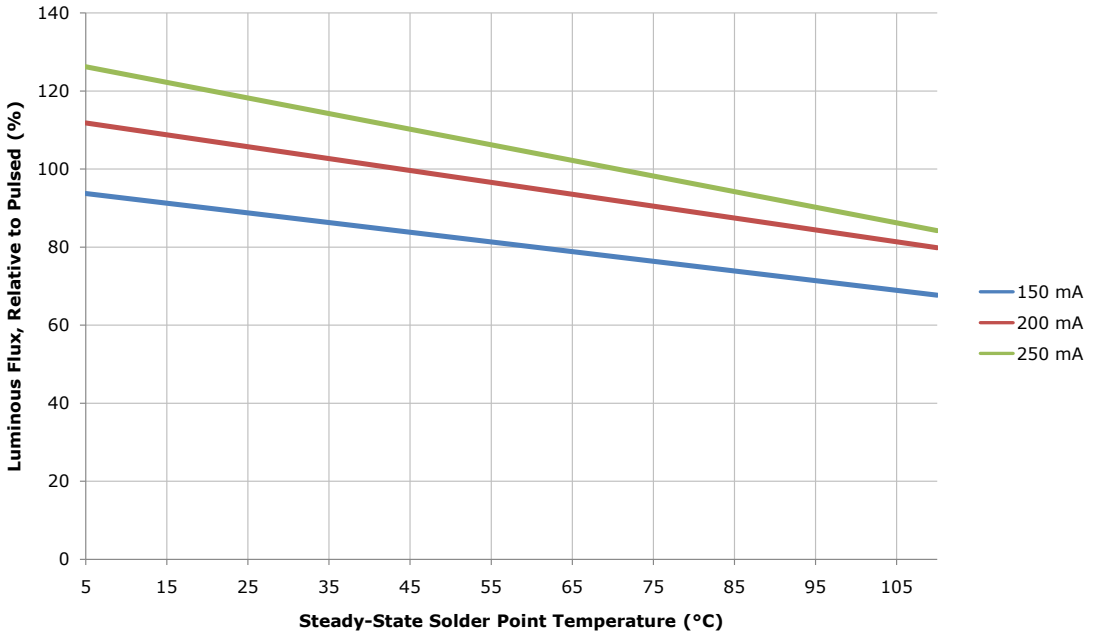

TYPICAL SPATIAL DISTRIBUTION

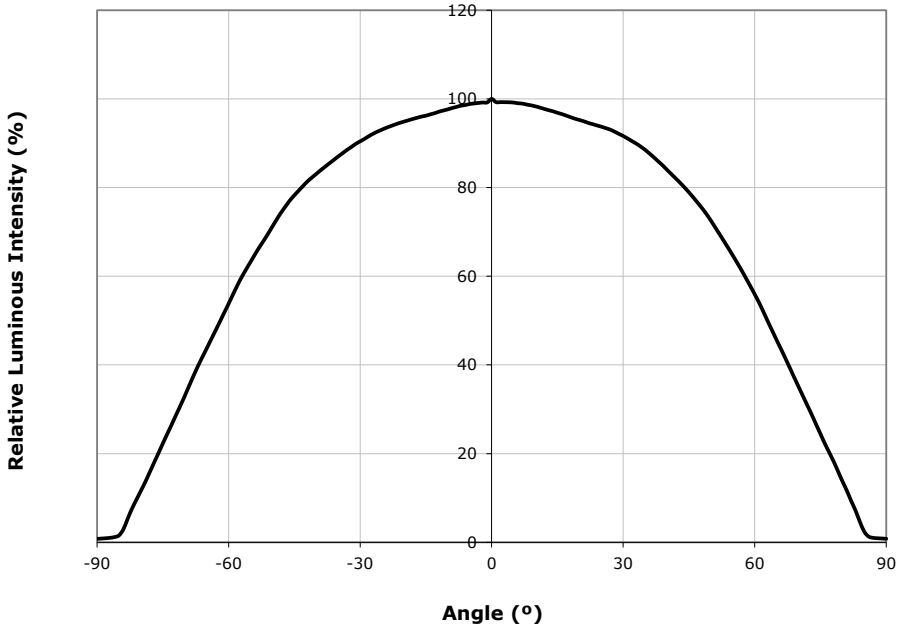

Copyright © 2010-2013 Cree, Inc. All rights reserved. The information in this document is subject to change without notice. Cree®, the Cree logo, XLamp® and EasyWhite® are registered trademarks of Cree, Inc.

REFLOW SOLDERING CHARACTERISTICS

In testing, Cree has found XLamp MP-L EasyWhite LEDs to be compatible with JEDEC J-STD-020C, using the parameters listed below. As a general guideline, Cree recommends that users follow the recommended soldering profile provided by the manufacturer of solder paste used.

Note that this general guideline may not apply to all PCB designs and configurations of reflow soldering equipment.

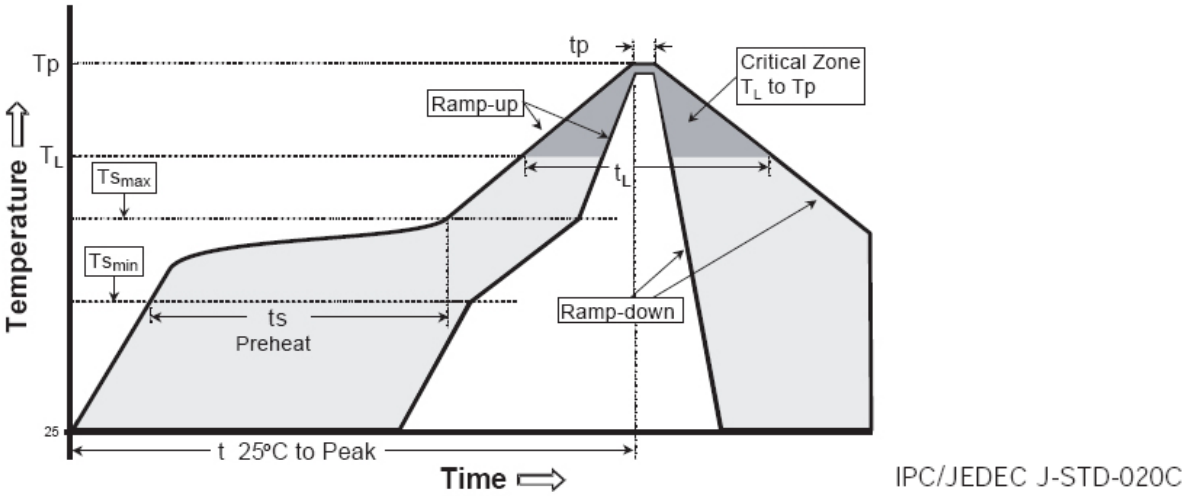

Profile Feature	Lead-Based Solder	Lead-Free Solder
Average Ramp-Up Rate (Ts_{max} to Tp)	3 °C/second max.	3 °C/second max.
Preheat: Temperature Min (Ts_{min})	100 °C	150 °C
Preheat: Temperature Max (Ts_{max})	150 °C	200 °C
Preheat: Time (ts_{min} to ts_{max})	60-120 seconds	60-180 seconds
Time Maintained Above: Temperature (T_L)	183 °C	217 °C
Time Maintained Above: Time (t_L)	60-150 seconds	60-150 seconds
Peak/Classification Temperature (Tp)	215 °C	260 °C
Time Within 5 °C of Actual Peak Temperature (tp)	10-30 seconds	20-40 seconds
Ramp-Down Rate	6 °C/second max.	6 °C/second max.
Time 25 °C to Peak Temperature	6 minutes max.	8 minutes max.

Note: All temperatures refer to the topside of the package, measured on the package body surface.

Copyright © 2010-2013 Cree, Inc. All rights reserved. The information in this document is subject to change without notice. Cree®, the Cree logo, XLamp® and EasyWhite® are registered trademarks of Cree, Inc.

BIN AND ORDER-CODE FORMAT

Bin codes and order codes are configured in the following manner:

Order Code

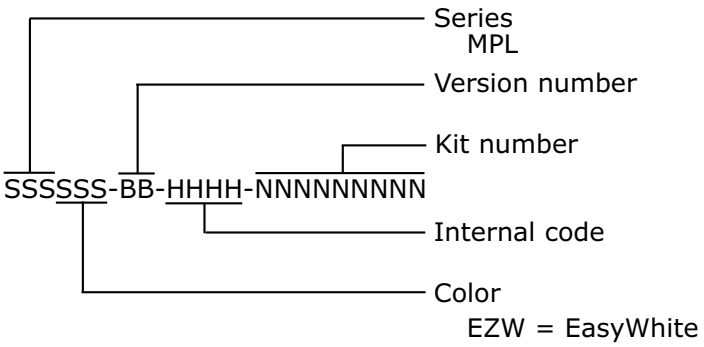

Bin Code

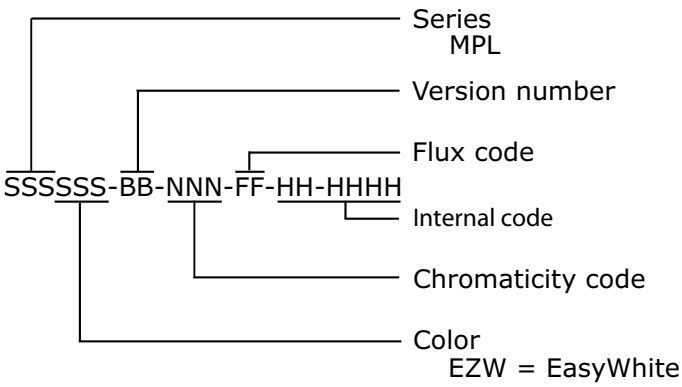

Copyright © 2010-2013 Cree, Inc. All rights reserved. The information in this document is subject to change without notice. Cree®, the Cree logo, XLamp® and EasyWhite® are registered trademarks of Cree, Inc.

PERFORMANCE GROUPS – BRIGHTNESS

XLamp MP-L EasyWhite LEDs are tested for luminous flux and placed into one of the following luminous-flux groups:

Group Code	Min. Luminous Flux @ 150 mA per string (lm)	Max. Luminous Flux @ 150 mA per string (lm)
A0	600	700
B0	700	800
C0	800	900
D0	900	1000
E0	1000	1100
F0	1100	1200

PERFORMANCE GROUPS – CHROMATICITY

XLamp MP-L EasyWhite LEDs are tested for chromaticity and placed into one of the regions defined by the following bounding coordinates.

EasyWhite Color Temperatures – 4-Step			
Code	CCT	x	y
40F	4000 K	0.3744	0.3685
		0.3782	0.3837
		0.3912	0.3917
		0.3863	0.3758
35F	3500 K	0.3981	0.3800
		0.4040	0.3966
		0.4186	0.4037
		0.4116	0.3865
30F	3000 K	0.4242	0.3919
		0.4322	0.4096
		0.4449	0.4141
		0.4359	0.3960
27F	2700 K	0.4475	0.3994
		0.4573	0.4178
		0.4695	0.4207
		0.4589	0.4021

EasyWhite Color Temperatures – 2-Step			
Code	CCT	x	y
40H	4000 K	0.3784	0.3741
		0.3804	0.3818
		0.3867	0.3857
		0.3844	0.3778
35H	3500 K	0.4030	0.3857
		0.4061	0.3941
		0.4132	0.3976
		0.4099	0.3890
30H	3000 K	0.4291	0.3973
		0.4333	0.4062
		0.4395	0.4084
		0.4351	0.3994
27H	2700 K	0.4528	0.4046
		0.4578	0.4138
		0.4638	0.4152
		0.4586	0.4060

Copyright © 2010-2013 Cree, Inc. All rights reserved. The information in this document is subject to change without notice. Cree®, the Cree logo, XLamp® and EasyWhite® are registered trademarks of Cree, Inc.

CREE EASYWHITE COLOR TEMPERATURES PLOTTED ON THE 1931 CIE CURVE

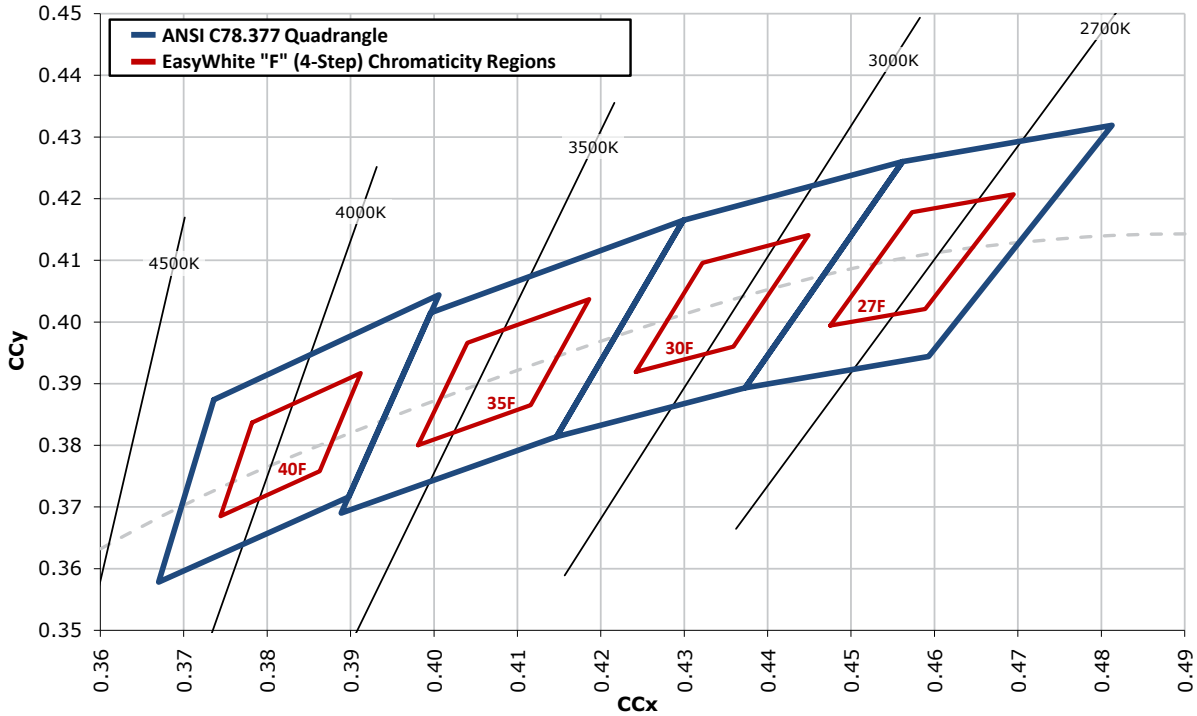

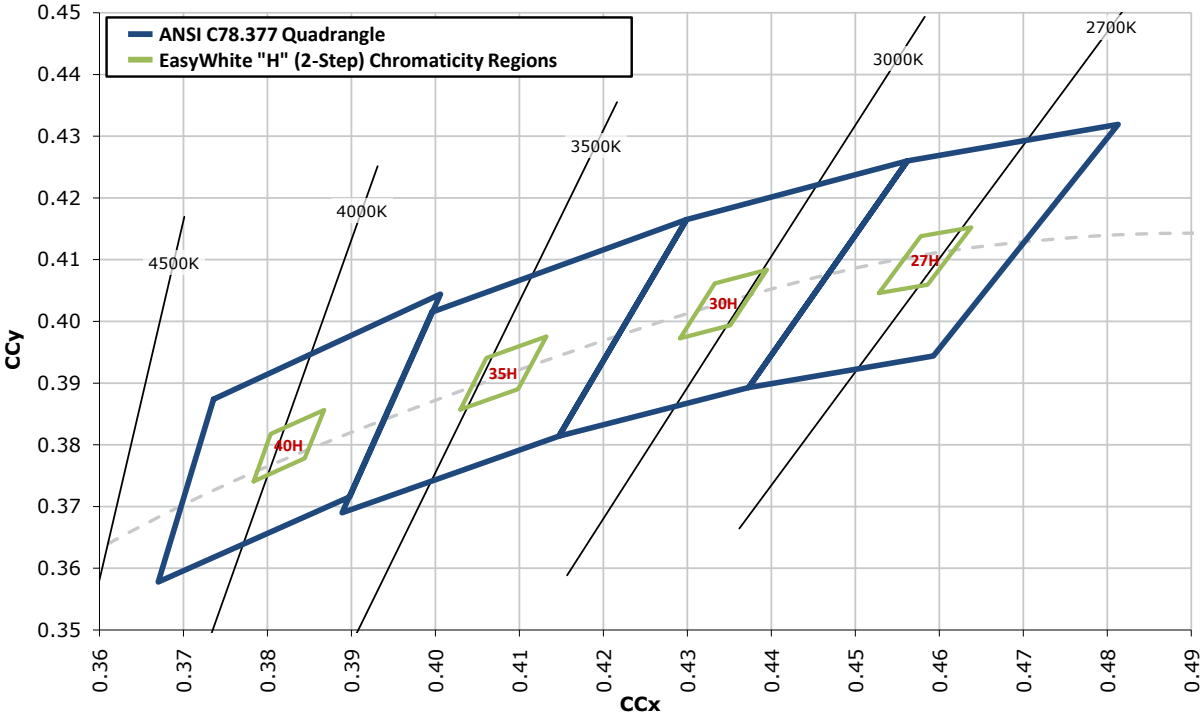

Copyright © 2010-2013 Cree, Inc. All rights reserved. The information in this document is subject to change without notice. Cree®, the Cree logo, XLamp® and EasyWhite® are registered trademarks of Cree, Inc.

STANDARD ORDER CODES AND BINS (MP-L EASYWHITE)

The following tables list standard kit numbers and performance bins. Kit numbers completely describe an order code's chromaticity regions and luminous flux range.

XLamp MP-L EasyWhite LED Standard Order Codes			
Min. Luminous Flux (lm) @ 150 mA*		Chromaticity Regions	Kit Number
Group	Flux (lm)		
EasyWhite			
B0	700	27F	0000B027F
		27H	0000B027H
		30F	0000B030F
		30H	0000B030H
		35F	0000B035F
		35H	0000B035H
C0	800	27F	0000C027F
		27H	0000C027H
		30F	0000C030F
		30H	0000C030H
		35F	0000C035F
		35H	0000C035H
D0	900	40F	0000D040F
		40H	0000D040H
E0	1000	40F	0000E040F
		40H	0000E040H

For other flux and chromaticity combinations, contact Cree or an authorized distributor.

* Cree XLamp MP-L EasyWhite order codes specify only a minimum flux bin and not a maximum. Cree may ship reels in flux bins higher than the minimum specified by the order code without advance notice. Shipments will always adhere to the chromaticity or DWL bin restrictions specified by the order code.

Copyright © 2010-2013 Cree, Inc. All rights reserved. The information in this document is subject to change without notice. Cree®, the Cree logo, XLamp® and EasyWhite® are registered trademarks of Cree, Inc.

NOTES

Lumen Maintenance Projections

Cree now uses standardized IES LM-80-08 and TM-21-11 methods for collecting long-term data and extrapolating LED lumen maintenance. For information on the specific LM-80 data sets available for this LED, refer to the public LM-80 results document at www.cree.com/xlamp_app_notes/LM80_results.

Please read the XLamp Long-Term Lumen Maintenance application note at www.cree.com/xlamp_app_notes/lumen_maintenance for more details on Cree's lumen maintenance testing and forecasting. Please read the XLamp Thermal Management application note at www.cree.com/xlamp_app_notes/thermal_management for details on how thermal design, ambient temperature, and drive current affect the LED junction temperature.

Moisture Sensitivity

XLamp MP-L EasyWhite LEDs are shipped in sealed, moisture-barrier bags (MBB) designed for long shelf life. If XLamp MP-L EasyWhite LEDs are exposed to moist environments after opening the MBB packaging but before soldering, damage to the LED may occur during the soldering operation. The derating table at right defines the maximum exposure time (in days) for an XLamp MP-L EasyWhite LED in the listed humidity and temperature conditions. LEDs with exposure time longer than the time specified below must be baked according to the baking conditions listed below.

Temp.	Maximum Percent Relative Humidity						
	30%	40%	50%	60%	70%	80%	90%
35 ºC	-	-	-	17	1	.5	.5
30 ºC	-	-	-	28	1	1	1
25 ºC	-	-	-	-	2	1	1
20 ºC	-	-	-	-	2	1	1

Cree recommends keeping XLamp LEDs in their sealed moisture-barrier packaging until immediately prior to use. Cree also recommends returning any unused LEDs to the resealable moisture-barrier bag and closing the bag immediately after use.

Baking Conditions

It is not necessary to bake all XLamp MP-L EasyWhite LEDs. Only the LEDs that meet all of the following criteria must be baked:

1. LEDs that have been removed from the original MBB packaging.
2. LEDs that have been exposed to a humid environment longer than listed in the Moisture Sensitivity section above.
3. LEDs that have not been soldered.

LEDs should be baked at 80 ºC for 24 hours. LEDs may be baked on the original reels. Remove LEDs from MBB packaging before baking. Do not bake parts at temperatures higher than 80 ºC. This baking operation resets the exposure time as defined in the Moisture Sensitivity section above.

Copyright © 2010-2013 Cree, Inc. All rights reserved. The information in this document is subject to change without notice. Cree®, the Cree logo, XLamp® and EasyWhite® are registered trademarks of Cree, Inc.

NOTES - CONTINUED

Storage Conditions

XLamp MP-L EasyWhite LEDs that have been removed from the original MBB packaging but not soldered should be stored in one of the following ways:

- Store the parts in a rigid metal container with a tight-fitting lid. Verify that the storage temperature is <30 °C, and place fresh desiccant and an RH indicator in the container to verify that the RH is no greater than 60%.
- Store the parts in a dry, nitrogen-purged cabinet or container that actively maintains the temperature at <30° and the RH at no greater than 60%.
- For short-term store only: LEDs can be resealed in the original MBB bag soon after opening. Fresh desiccant may be needed. Use the included humidity indicator card to verify <60% RH.

If an environment of <60% RH is not available for storage, XLamp MP-L EasyWhite LEDs should be baked (described above) before reflow soldering.

RoHS Compliance

The levels of RoHS restricted materials in this product are below the maximum concentration values (also referred to as the threshold limits) permitted for such substances, or are used in an exempted application, in accordance with EU Directive 2011/65/EC (RoHS2), as implemented January 2, 2013. RoHS Declarations for this product can be obtained from your Cree representative or from the Product Ecology section of www.cree.com.

REACh Compliance

REACh substances of high concern (SVHCs) information is available for this product. Since the European Chemical Agency (ECHA) has published notices of their intent to frequently revise the SVHC listing for the foreseeable future, please contact a Cree representative to insure you get the most up-to-date REACh Declaration. Historical REACh banned substance information (substances restricted or banned in the EU prior to 2010) is also available upon request.

UL Recognized Component

Level 4 enclosure consideration. The LED package or a portion thereof has been investigated as a fire and electrical enclosure per ANSI/UL 8750.

Vision Advisory Claim

WARNING. Do not look at exposed lamp in operation. Eye injury can result. For more information about LEDs and eye safety, please refer to the Cree LED Eye Safety application note at www.cree.com/xlamp_app_notes/led_eye_safety.

Copyright © 2010-2013 Cree, Inc. All rights reserved. The information in this document is subject to change without notice. Cree®, the Cree logo, XLamp® and EasyWhite® are registered trademarks of Cree, Inc.

MECHANICAL DIMENSIONS

All measurements are ±.13 mm unless otherwise indicated.

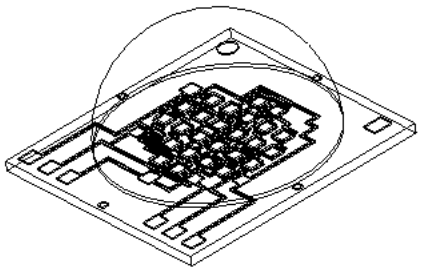

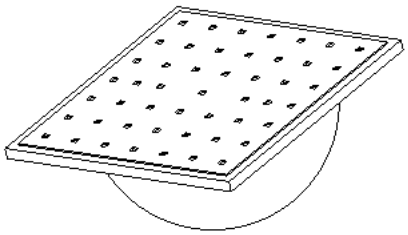

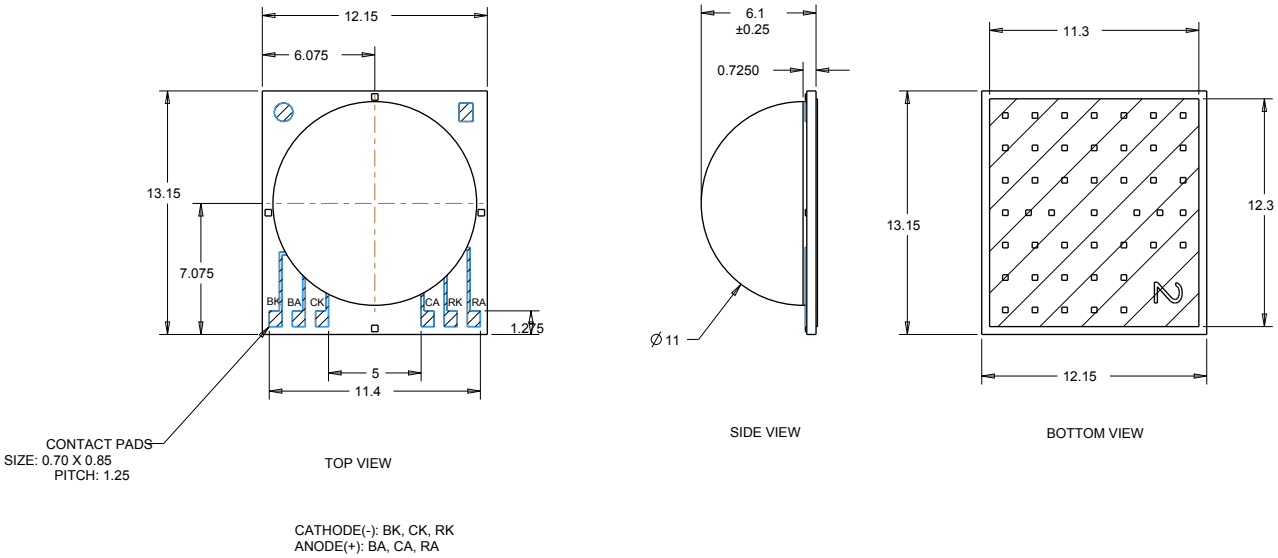

CATHODE(-): BK, CK, RK
ANODE(+): BA, CA, RA

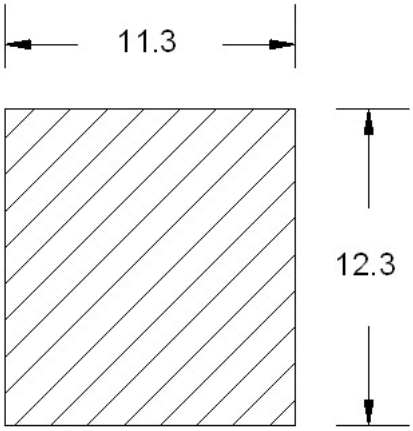

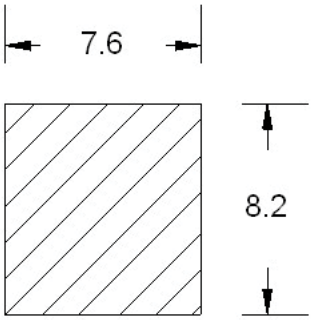

Copyright © 2010-2013 Cree, Inc. All rights reserved. The information in this document is subject to change without notice. Cree®, the Cree logo, XLamp® and EasyWhite® are registered trademarks of Cree, Inc.

TAPE AND REEL

All Cree carrier tapes conform to EIA-481D, Automated Component Handling Systems Standard.

All dimensions in mm.

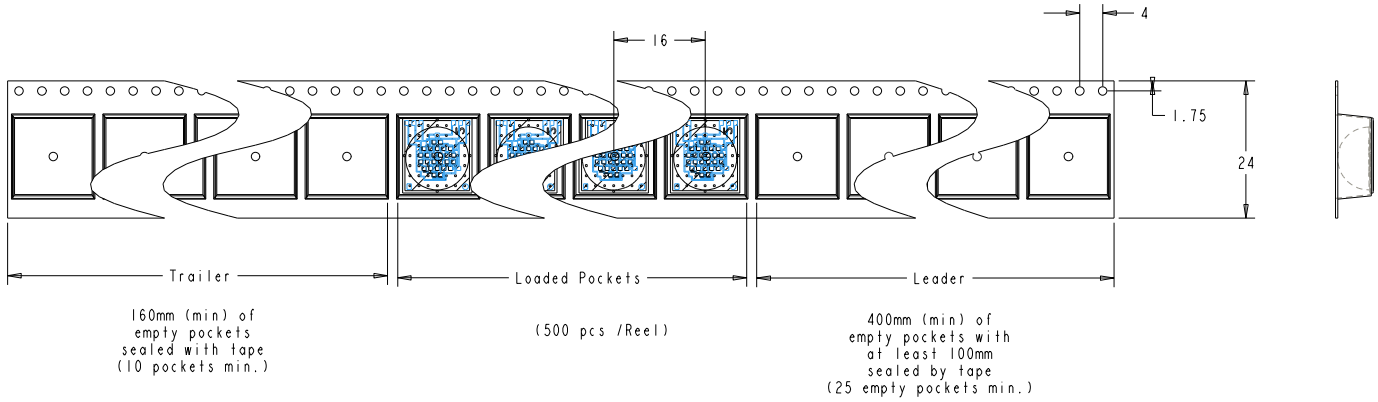

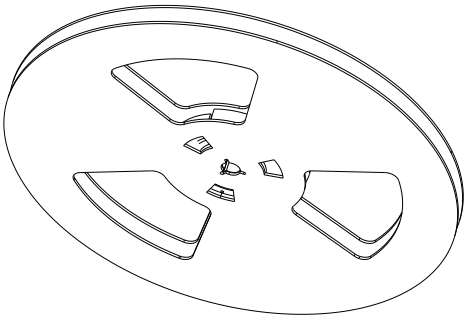

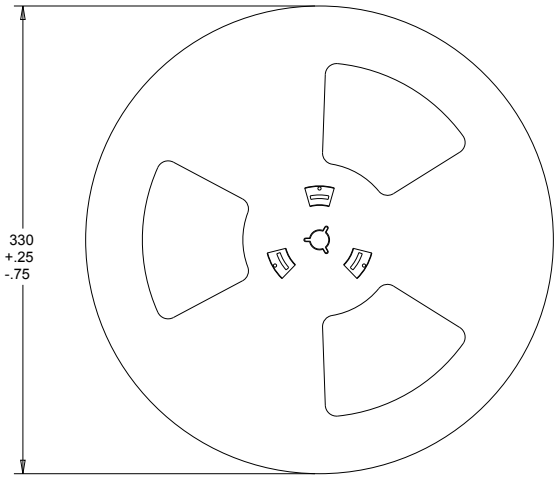

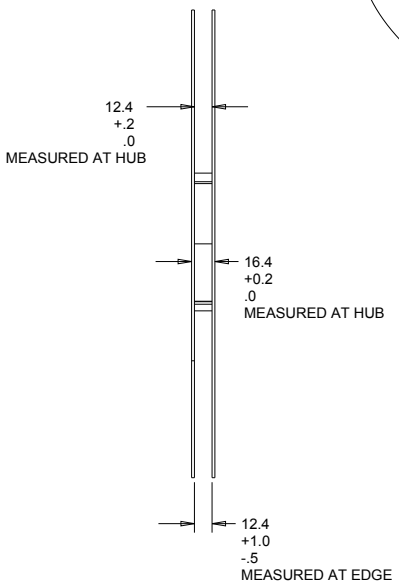

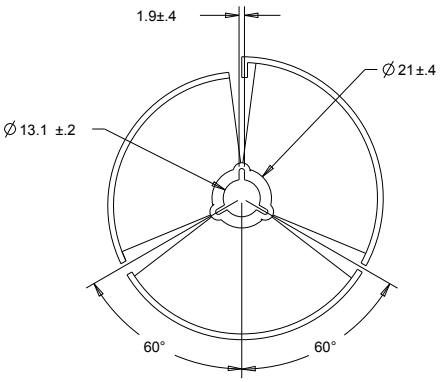

Copyright © 2010-2013 Cree, Inc. All rights reserved. The information in this document is subject to change without notice. Cree®, the Cree logo, XLamp® and EasyWhite® are registered trademarks of Cree, Inc.

PACKAGING

Unpackaged Reel

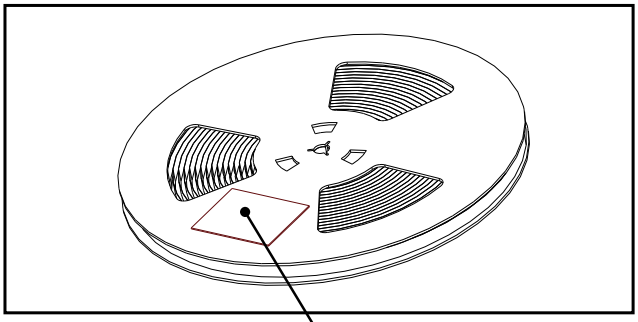

Packaged Reel

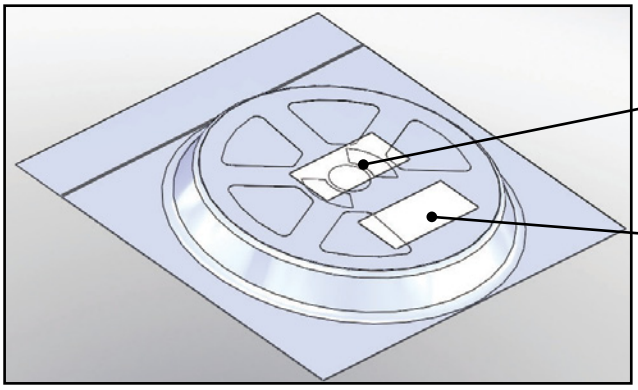

Boxed Reel

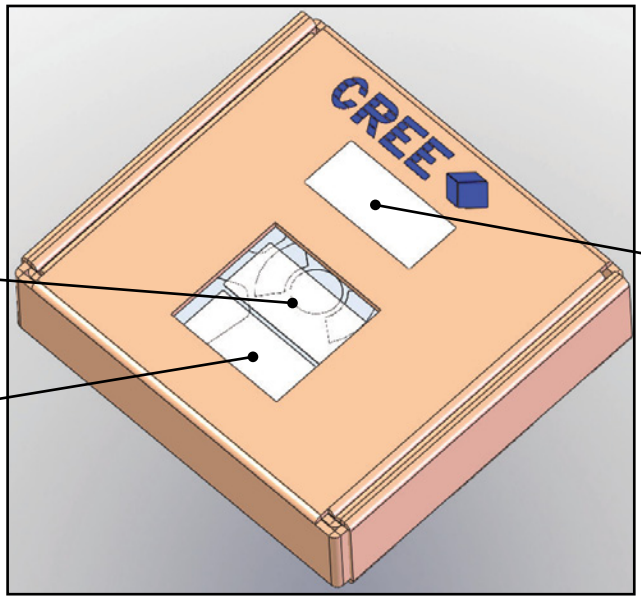

Copyright © 2010-2013 Cree, Inc. All rights reserved. The information in this document is subject to change without notice. Cree®, the Cree logo, XLamp® and EasyWhite® are registered trademarks of Cree, Inc.