MICRO SWITCH
FREEPORT ILLINOIS, U.S.A
A DIVISION OF HONEYWELL
FED. MFG. CODE 91929

SWITCH-BASIC

CATALOG LISTING
BZ-2R244-A2

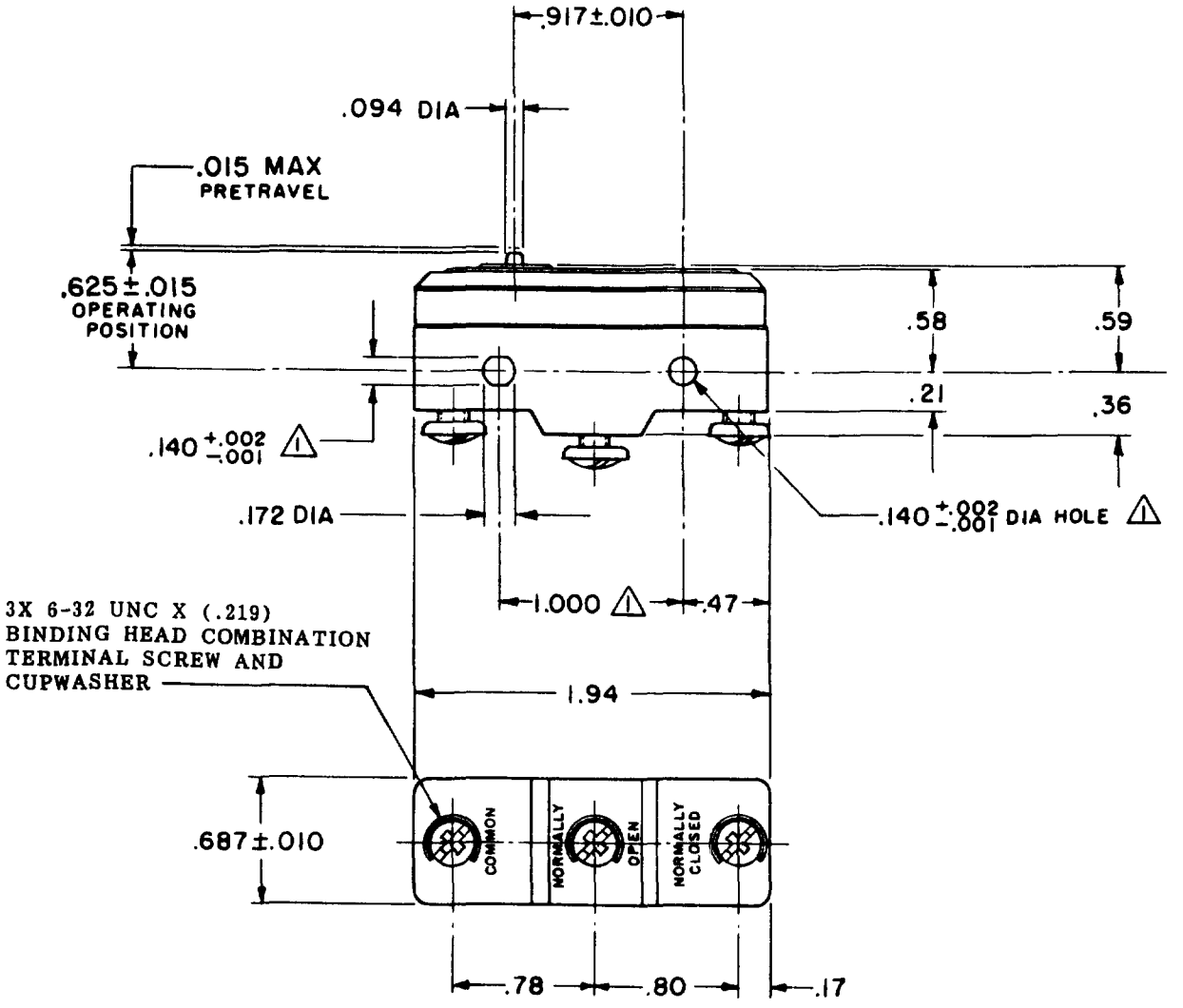

NOTES
⚠1 – MOUNTING HOLES WILL ACCEPT PINS OR SCREWS OF .139 MAX DIA ON 1.000 ±.002 CENTERS
2 – SWITCH WILL WITHSTAND TEMPERATURE OF 400° F FOR 100 HOURS

THIS DRAWING COVERS A PROPRIETARY ITEM AND IS THE PROPERTY OF MICRO SWITCH, A DIVISION OF HONEYWELL. THIS DRAWING IS NOT TO BE COPIED OR USED WITHOUT THE APPROVAL OF MICRO SWITCH.

CHARACTERISTICS

OPERATING FORCE ---------- 9-13 OZ
RELEASE FORCE ---------- 4 OZ MIN
DIFFERENTIAL TRAVEL --- .0004-.0020
OVERTRAVEL ---------- .005 MIN

ELECTRICAL DATA

CONTACT ARRANGEMENT
S P D T

UNDERWRITERS' LAB. INC. LISTED RATING
-L35- 5 A-125, 250 OR 480 VAC
1/2 A-125 VDC; 1/4 A-250 VDC
-L288- CE

SCALE FULL
DO NOT SCALE PRINT

UNLESS OTHERWISE NOTED
DIMENSIONS ARE IN INCHES
TOLERANCES ARE:

ONE PLACE	(.0)	±.030
TWO PLACE	(.00)	±.015
THREE PLACE	(.000)	±.005
ANGLES		±

WEIGHT .063 LB

M BZ-2R244-A2
PAGE 1 OF 1
RELEASE NO. PR-1007
REPLACES
DRAWING NUMBER
ISSUE 4
CHECK
18AUG04
AK
CHECK
17 Dec 69
LSD
CHECK
8 DEC 69
GCH
DRAWN

REVISIONS

A	CO-73287-J	JAL 22 NOV 93
B	C093346	DLT 28 AUG 98
C	0007223	AS 18AUG04

FORMTEK
FO-50378-1A