MICRO SWITCH
a Honeywell Division
FED. MFG. CODE 91929

SWITCH-BASIC

CATALOG LISTING
BZ-7RQ144T

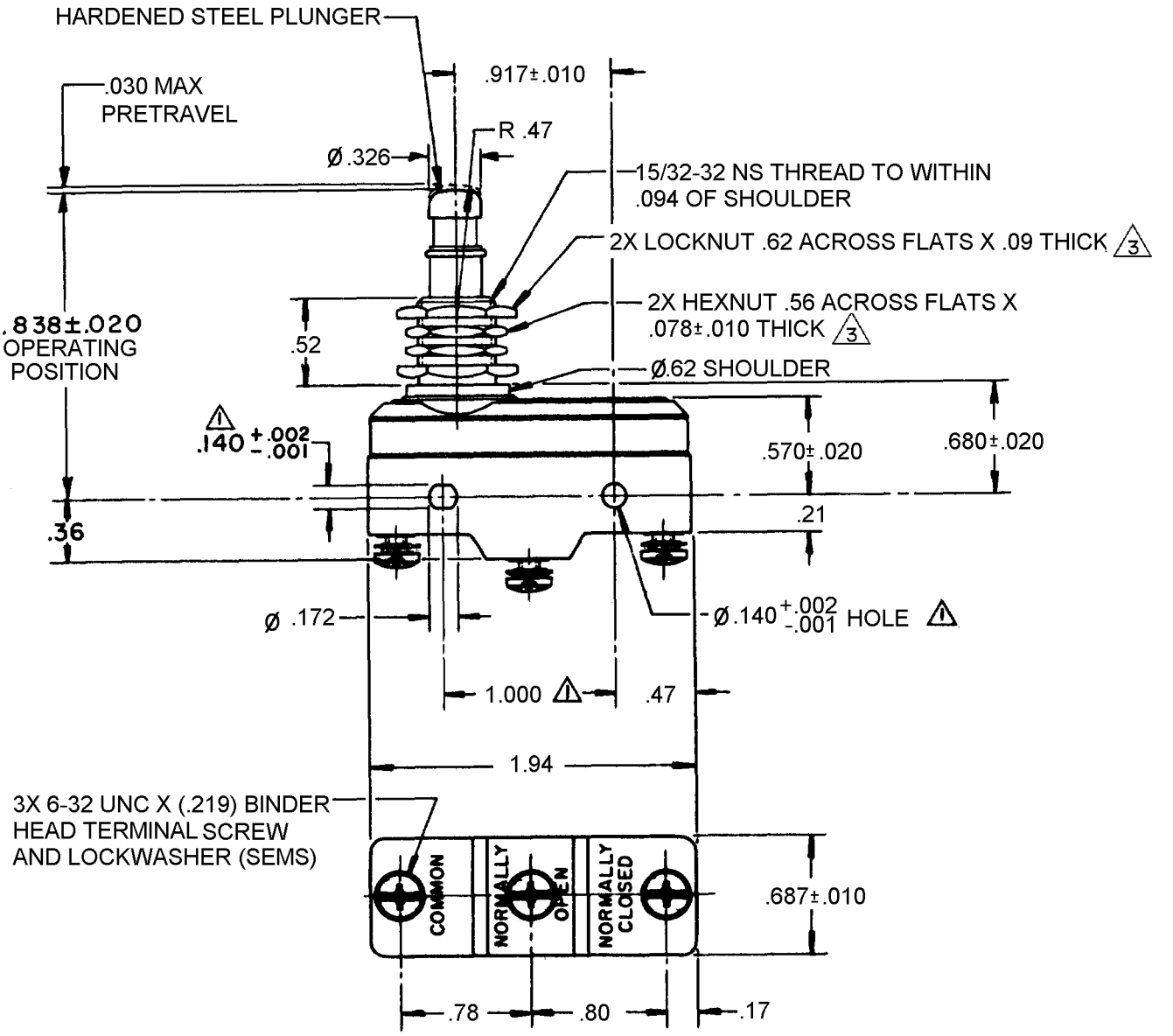

NOTES
1. MOUNTING HOLES WILL ACCEPT PINS OR SCREWS OF .139 MAX DIA ON 1.000±.002 CENTERS
2- SWITCH WILL PERFORM SATISFACTORILY IN TEMPERATURE TO MINUS 65°F
3. HARDWARE FURNISHED UNASSEMBLED

THIS DRAWING COVERS A PROPRIETARY ITEM AND IS THE PROPERTY OF MICRO SWITCH, A DIVISION OF HONEYWELL. THIS DRAWING IS NOT TO BE COPIED OR USED WITHOUT THE APPROVAL OF MICRO SWITCH.

THIRD ANGLE PROJECTION

CHARACTERISTICS	ELECTRICAL DATA	SCALE FULL / DO NOT SCALE PRINT
OPERATING FORCE ---------- 22-28 OZ	CONTACT ARRANGEMENT SPDT	UNLESS OTHERWISE SPECIFIED TOLERANCES ARE
RELEASE FORCE ---------- 4 OZ MIN	L96 15A 125, 250 OR 480 VAC 1/3HP 125 VAC, 1/4HP 250 VAC 1/2A 125 VDC, 1/4A 250 VDC	ONE PLACE (.0) ±.030
DIFFERENTIAL TRAVEL ---------- .0025 - .0050	-L288- -L299- -L306-	TWO PLACE (.00) ±.015
OVERTRAVEL ---------- .219 MIN	16A 250V ∿ T855E4	THREE PLACE (.000) ±.005
		ANGLES ±
		WEIGHT

CATALOG LISTING BZ-7RQ144T
PAGE 1 OF 1
RELEASE NO. SR-10567
REPLACES
ISSUE 7
CHECK
REVISIONS
A 202699 GJW 29 MAR 01
CHECK
29 MAR 01
SAV
CHECK
29 MAR 01
DRAWN GJW
RASTER