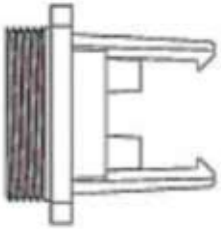

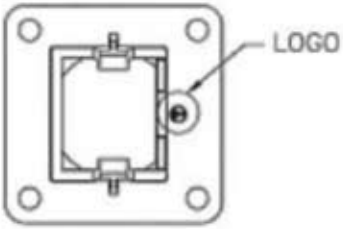

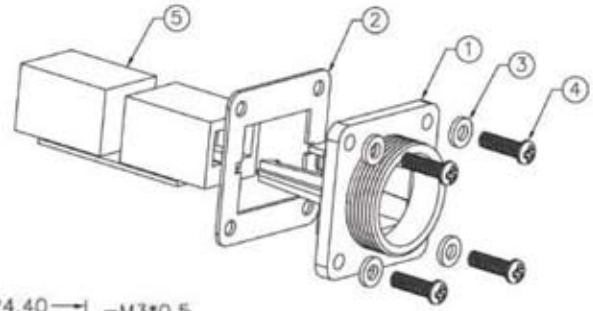

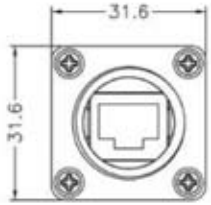

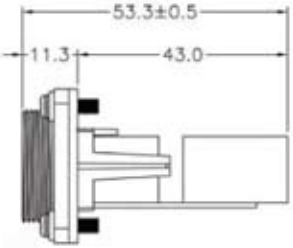

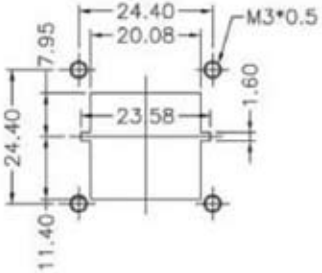

Recommended Panel Cut-Out

Material:

- Jacket: ABS 94V-0
- Gasket: EP50
- Gasket: EP70
- Screw: stainless steel
- PCB:RJ45 PCB
- Waterproof Rate: IP67
- Connector: Black, ABS
- Housing: Black, ABS Plastic
- Contacts: Gold Plating

RoHS Complaint

Scale	1:1	Removed incorrect thread size	2/15/12	Miller			Name
TOLERANCE					Drawn	12.06.11	Chappell
X.X	±0.40				Approved	2/15/12	Warner
X.XX	±0.25						
X.XXX	±0.15						
Angle	±3°						
		Modification	Date	Name			

ASSMANN WSW components

Item No. **A-RJ45GFS-R**

Title: Waterproof Modular RJ45 Jack, Straight, CAT 5e, Panel Type

Drawing No.

rev 01

Replace

Sheet