PART NAME	NEMA 4X ENCLOSURE	PART No.	AN-1313, AN-1313-G, AN-2813 & AN-2813-B	REV. DATE	2-12-04

MATERIAL: ALUMINUM ALLOY #ADC-10

FINISH: NATURAL (NO SUFFIX)
GRAY (SUFFIX -G)
SMOOTH BLACK (SUFFIX -B)

FOUR (4) M4 x 25mm (0.975") LG. SCREWS SUPPLIED FOR ASSEMBLY.

TWO (2) M3.5 x 6mm LG. NICKEL PLATED SCREWS AND WASHERS SUPPLIED FOR GROUNDING

ALL DIMENSIONS HAVE ±0.015 TOLERANCE UNLESS OTHERWISE SPECIFIED

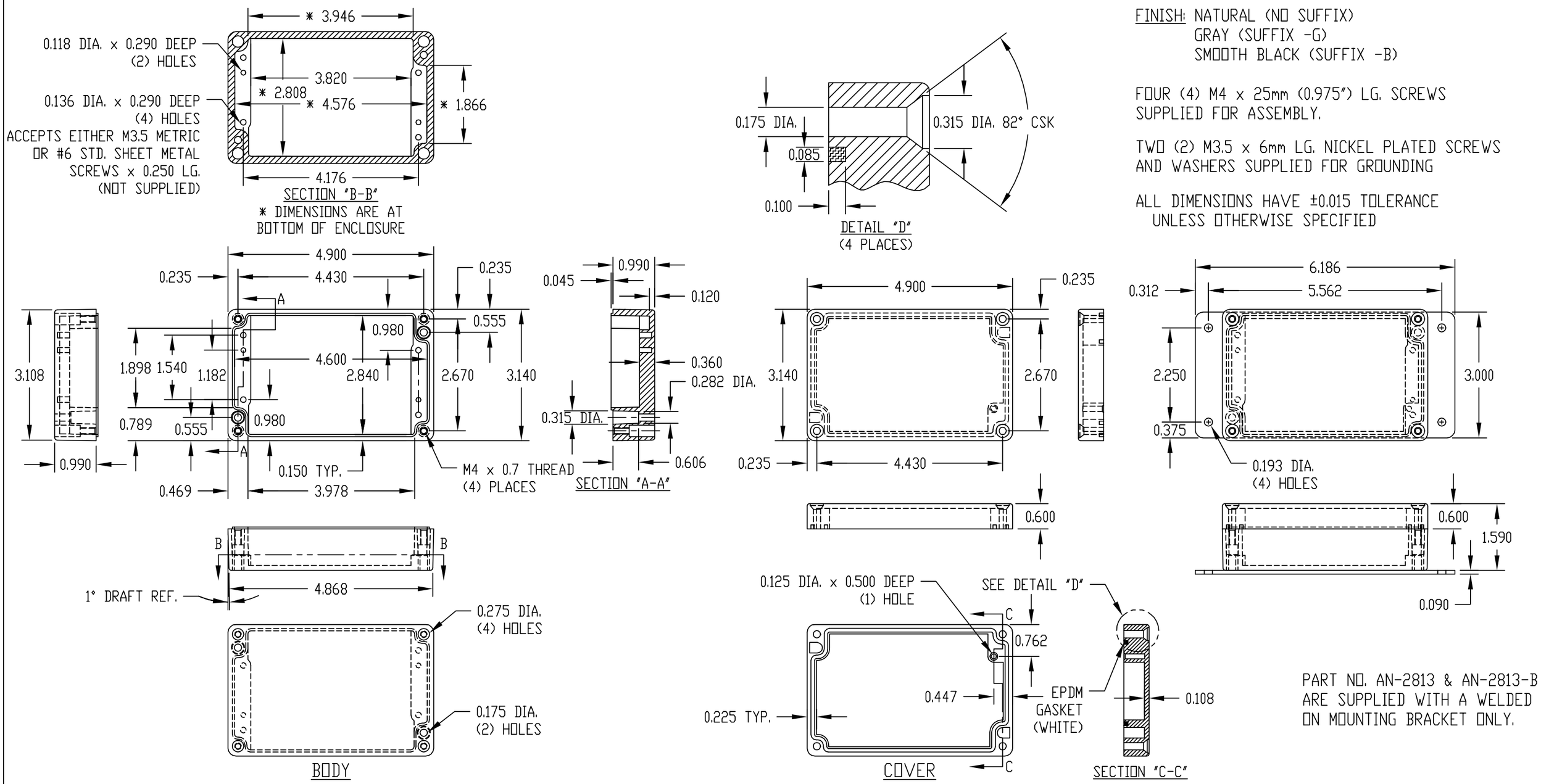

PART NO. AN-2813 & AN-2813-B ARE SUPPLIED WITH A WELDED ON MOUNTING BRACKET ONLY.